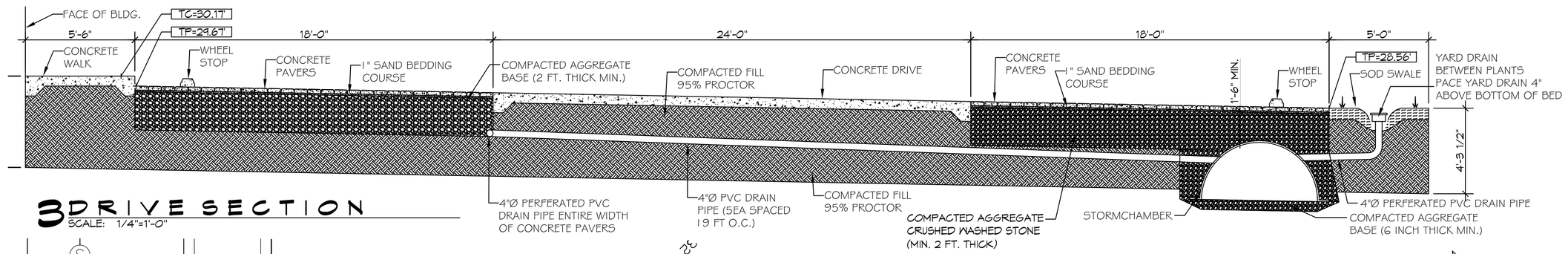

3 DRIVE SECTION
SCALE: 1/4"=1'-0"

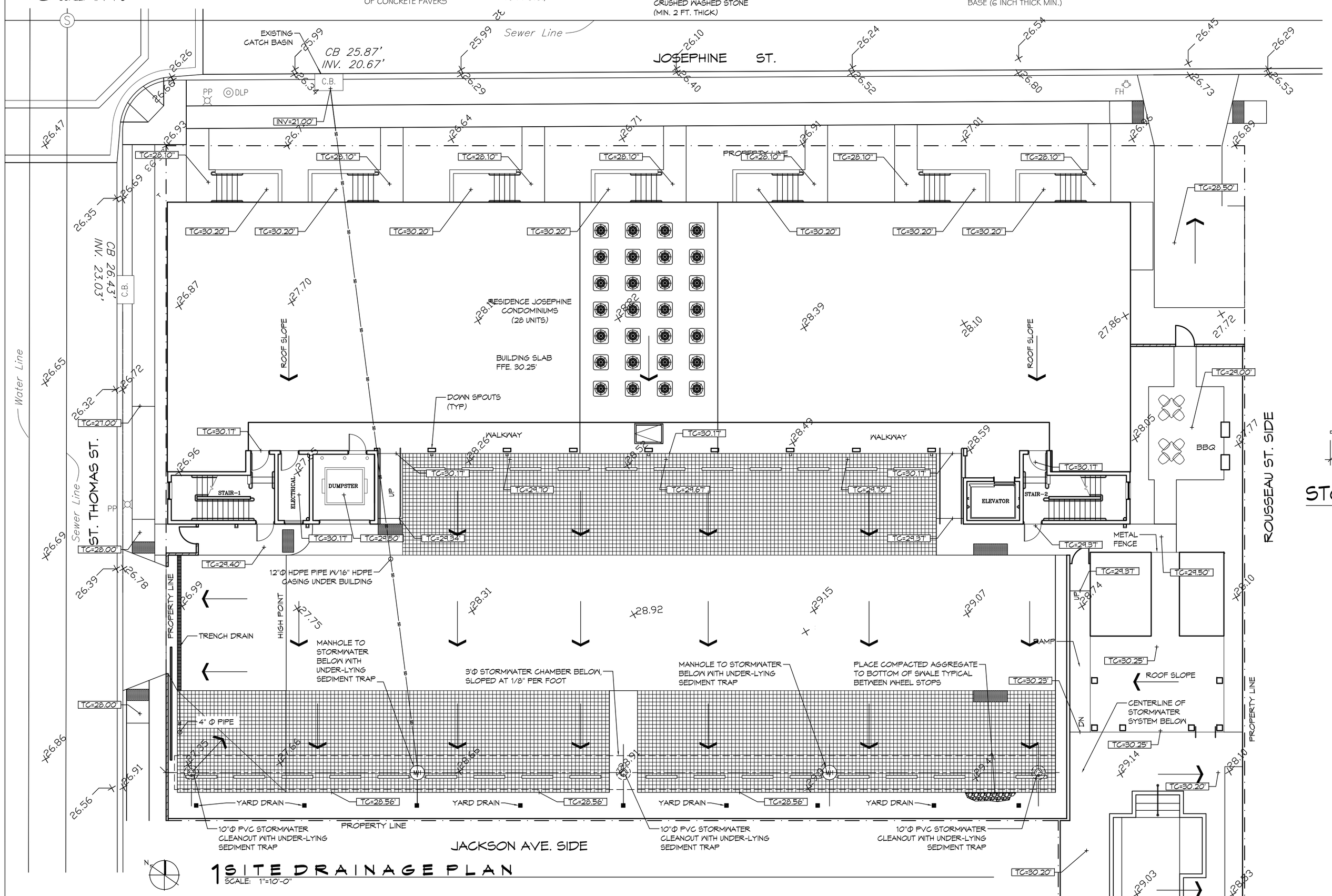

1 SITE DRAINAGE PLAN
SCALE: 1"=10'-0"

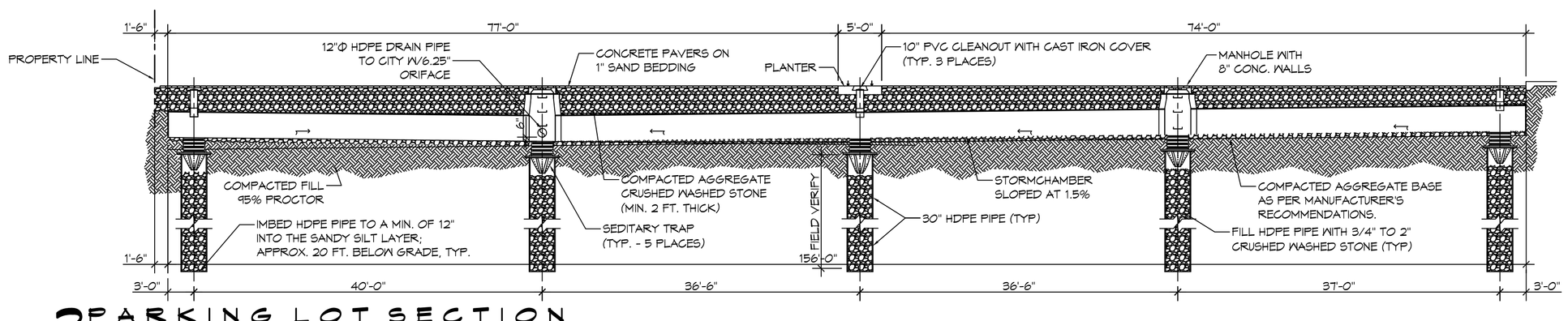

2 PARKING LOT SECTION
SCALE: 1"=10'-0"

AT STORMWATER CHAMBER

GENERAL SITE DRAINAGE NOTES

1. DRAIN PIPE(S) MUST BE THE BELL AND SPIGOT TYPE WITH "O" RING RUBBER GASKETS. THE BELLS OF THE PIPES SHALL BE LAID UPSTREAM. ALL JOINTS SHALL BE WRAPPED WITH GEOTEXTILE FABRIC. ALL PIPES SHALL REQUIRE A 3" COMPACTED SAND OR LIMESTONE BASE.
2. REMOVE DEBRIS AND CLEAN BOTTOM OF DITCHES DOWN 6" IN DEPTH - REPLACE ANY BROKEN/CRUSHED PIPES OR CULVERTS WITH SAME SIZE AND TYPE.
3. DRAIN PIPE AND FITTINGS WITHIN PROPERTY LINE SHALL BE POLYVINYL CHLORIDE PLASTIC PIPE, MEETING CLASS 100 C-900 PVC.
4. ELEVATIONS SHOWN ARE MSL.
5. FIELD VERIFY ALL ELEVATIONS AND AND DRAINAGE SYSTEM PLACEMENT PRIOR TO START OF WORK.
6. PROVIDE VERTICAL ELBOW AT DOWNSPOUTS FOR CONNECTION TO SUBSURFACE DRAINAGE WHERE INDICATED. ELBOW ID SHALL BE SIZED SUCH THAT THE DOWNSPOUT CAN BE INSERTED INTO THE PIPE OPENING WITHOUT DEFORMATION TO THE DOWNSPOUT.

SITE DRAINAGE LEGEND

- TC=100.0' — TOP OF CONCRETE
- TG=100.0' — TOP OF GRATE
- INV=100.0' — INVERT OF PIPE
- DRAINAGE FLOW DIRECTION ARROW

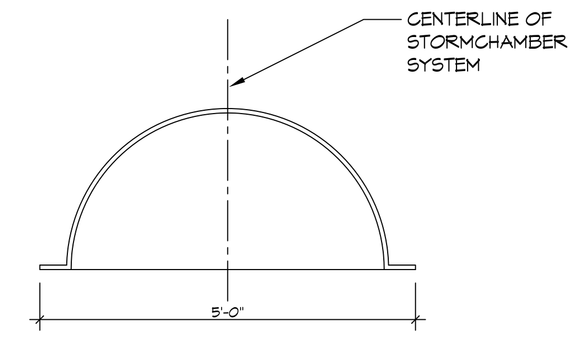

STORMCHAMBER SECTION
AT END CAP

4 SECTION
SCALE: N.T.S.

STORM WATER RUN-OFF CALCULATIONS

PROJECT: Josephine Condos

STORMWATER RUN-OFF CALCULATIONS

Formulas used:

[1] RATIONAL METHOD: Q=AGI

where:
Q= Peak discharge of watershed in cubic feet per second (cfs) due to maximum storm assumed.
A= Area of watershed in acres.
c= Coefficient of run-off [2].
I= Intensity of rainfall in inches per hour based on concentration time. (3)

[4] $TC = \left(\frac{L^{0.8}\left(\frac{1000}{S}-9\right)^{0.7}}{(1140L^{0.3})}\right)$

where:
TC= Time of concentration= time required for rain falling at most remote point to reach discharge point.
c= Site run-off coefficient based on conditions shown.
s= Percent slope of overland flow

PRIOR TO DEVELOPMENT
10 Year Frequency

Q_1 = AGI

Watertight Surfaces			0	sqft	0.000	Acres
c(1) =	0.8					
Brick Pavers			0	sqft	0.000	Acres
c(2) =	0.25					
Green Space			24,211	sqft	0.556	Acres
c(3) =	0.3					
Summary			24,211	sqft	0.556	Acres
c =	0.30					

Duration (D) = Time of concentration (TC)

where	L =	191	run-off length ft	Elev diff 1
	c =	0.30	run-off coef	
	S =	0.5236	percent slope	
therefore	TC = D =	12.30	minutes	
Expected rainfall intensity	I =	6.55	in/hr	
Q_1 =	1.043	cfs		

POST DEVELOPMENT
10 Year Frequency

Q_2 = AGI

Watertight Surfaces			21,086	sqft	0.484	Acres
c(1) =	0.90					
Brick Pavers			0	sqft	0.000	Acres
c(2) =	0.30					
Green Space			3,145	sqft	0.072	Acres
c(3) =	0.3					
Summary			24,211	sqft	0.556	Acres
c =	0.82					

Duration (D) = Time of concentration (TC)

where	L =	190	run-off length ft	Elev diff 1
	c =	0.82	run-off coef	
	S =	0.5002	percent slope	
therefore	TC = D =	5.00	minutes	
Expected rainfall intensity	I =	7.02	in/hr	
Q_2 =	3.574	cfs		

CAPTURE REQUIREMENTS

Capture the 1st 1.25" of rainfall of a 10 year storm over a 24-hr period

Storage = 1.25"/12 x sqft of Watertight Surface 21184.4 cuft or 16,414 Gallons

CAPTURE REQUIREMENTS

Storage = 1.25"/12 x sqft of Watertight Surface 21184.0 cuft or 16,444 Gallons

Storage will be constructed using StormChamber with an area 14.2 s.f.

StormChamber Length Required with 100% Storage Capacity = 154.86

CALCULATE THE SIZE ORIFICE TO RESTRICT FLOW

[5] $A = \frac{Q}{c_d\sqrt{(2gh)}}$

where:
A= Discharge Area required
g= Acceleration of gravity
c= Discharge coefficient
h= Hydraulic head
Q= Flow volume from run-off

Q =	1.043	cfs	h =	1.00	feet
c =	0.82	coefficient	A =	0.220	sqft
g =	32.16	ft/sec/sec			

REQUIRED SIZE ORIFICE = 0.35 inch inside diameter

References:
1. Chen, N.F. The Civil Engineering Handbook, 1985. Eq.# 3.11, pg. 103b
2. Beelye, Elwyn E. Data Book for Civil Engineers, Vol.1 1960. Tbl. B, pg. 10-02
3. Beelye, Elwyn E. Data Book for Civil Engineers, Vol.1 1960. Fig.B, pg. 10-01
4. Chen, N.F. The Civil Engineering Handbook, 1985. Tbl. 3.1.2 Regan Equation (n=0.013)
5. Chen, N.F. The Civil Engineering Handbook, 1985. Eq.# 20.32, pg. 49d

DAMMON ENGINEERING, INC.
LOUISIANA & MISSISSIPPI
Slidell, Louisiana
Ph. 985-649-5839 Fax: 985-641-5950
www.dammonengineering.com
info@dammonengineering.com

RESIDENCE JOSEPHINE CONDOMINIUMS
2100 St. Thomas St.
New Orleans, Louisiana 70130

SCALE: AS SHOWN	FILE NAME: SITE DRAINAGE PLAN
DATE: 01-11-16	

STEVEN J. FINEGAN ARCHITECTS, LTD.
A PROFESSIONAL CORPORATION
123 S. Pierce St. - New Orleans, LA 70119
(504)486-5744 www.stevefineganarchitect.com
E-mail: stevefinegan@nocoxmail.com

NO.	DATE	REVISIONS

C1.2

This drawing is the property of STEVEN J. FINEGAN ARCHITECTS, LTD. it is not to be reproduced, copied or altered in whole or in part. It is not to be used for any purpose without the approval of STEVEN J. FINEGAN ARCHITECTS LTD. and is to be returned on request.