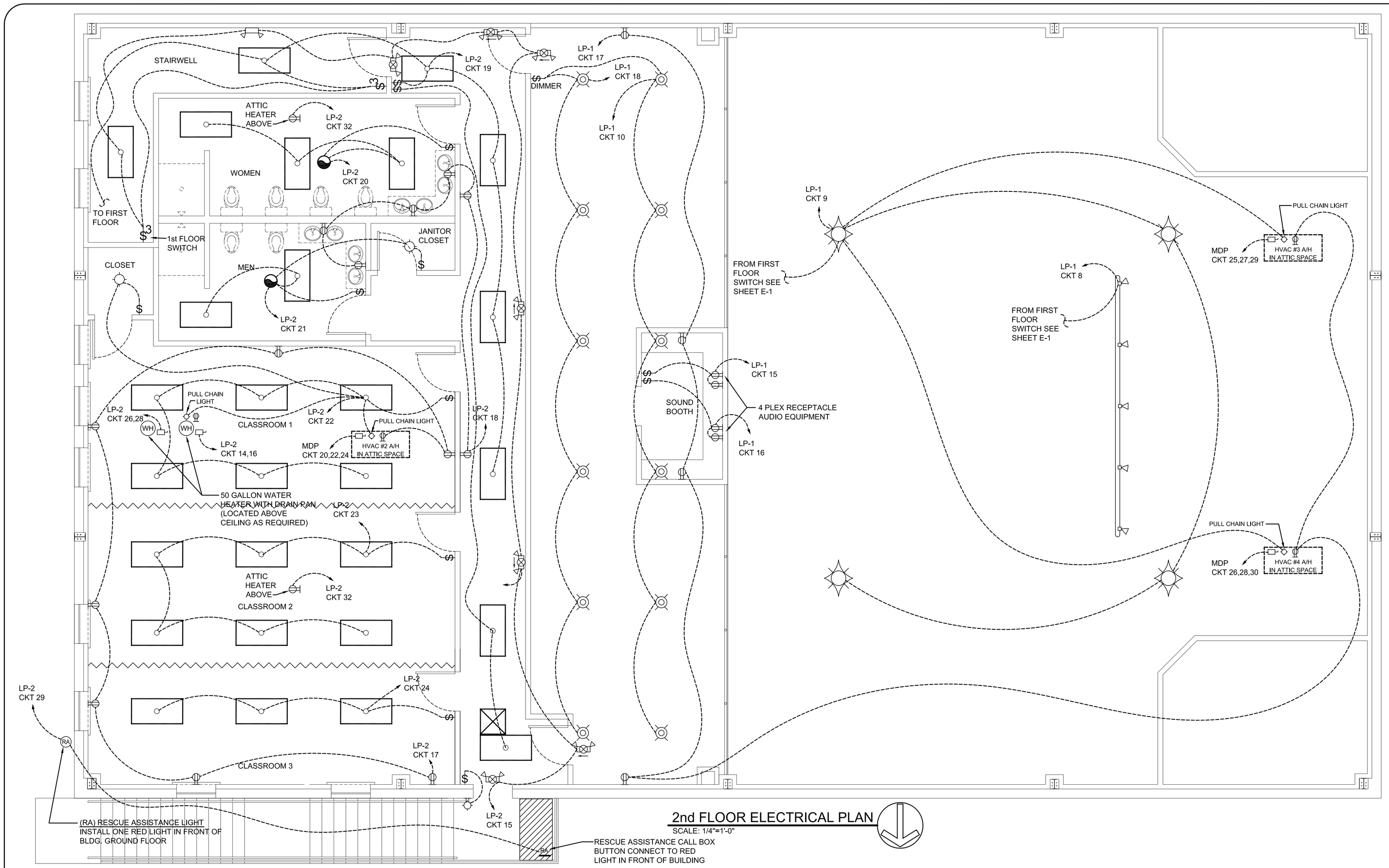

2nd FLOOR ELECTRICAL PLAN

SCALE: 1/4"=1'-0"

LEGEND

- 2'x4' RECESSED FLUORESCENT LAMP, STEEL HOUSING
- EMERGENCY / EXIT LIGHT WITH 90 MIN. BATTERY BACKUP
- EMERGENCY LIGHT WITH 90 MIN. BATTERY BACKUP
- MOUNTED LIGHT
- LIGHT (VERIFY STYLE)
- 120V, 20A DUPLEX RECEPTACLE
- WP - 120V, 20A DUPLEX RECEPTACLE (WEATHER PROOF)
- GFI RECEPTACLE
- J - JUNCTION BOX
- DISCONNECT
- POWER PANEL
- WH - WATER HEATER W/ DISCONNECT
- EXHAUST FAN
- $ - SWITCH
- $3 - 3-WAY SWITCH
- RECESSED CAN LIGHT
- CHANDELIER (VERIFY STYLE)

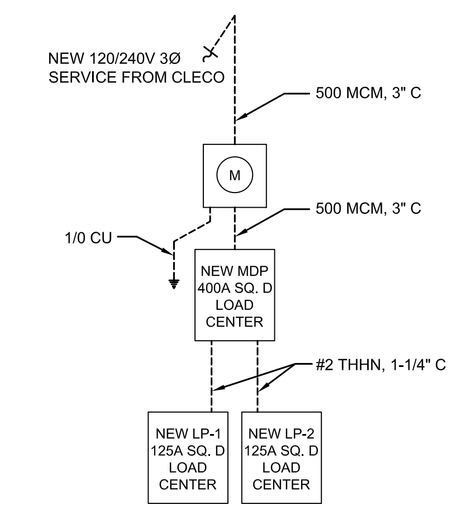

ELECTRICAL RISER DIAGRAM

N.T.S.

PANEL: MDP-1
LOCATION: DRESSING ROOM
FEEDER SOURCE: CLECO, 400 A
VOLTAGE: 240/120V, 3Ø, 4W, 300A ML
TYPE: SQUARE D TYPE QO LOAD CENTER RECESSED

CKT. NO.	LOAD DESCRIPTION / LOCATION	BREAKER AMP	BREAKER POLE	LOAD (VA)	AB BB CB	LOAD (VA)	BREAKER POLE	BREAKER AMP	LOAD DESCRIPTION / LOCATION	CKT. NO.
1	LP-1	125	2	13520		17550	2	125	LP-2	2
3										4
5	SPACE	-	-	-		-	-	-	SPACE	6
7										8
9	HVAC #1 COMPRESSOR 10 TON	60	3	10000		10000	3	60	HVAC #2 COMPRESSOR 8 TON	10
11										12
13										14
15	HVAC #3 COMPRESSOR 10 TON	60	3	10000		10000	3	60	HVAC #4 COMPRESSOR 10 TON	16
17										18
19										20
21	HVAC #1 AIR HANDLER 10 TON W/ 15KW HEATER	80	3	15000		15000	3	80	HVAC #2 AIR HANDLER 8 TON W/ 15KW HEATER	22
23										24
25										26
27	HVAC #3 AIR HANDLER 10 TON W/ 15KW HEATER	80	3	15000		15000	3	80	HVAC #4 AIR HANDLER 10 TON W/ 15KW HEATER	28
29										30
31	1/2" WELL	30	2	7200		31200	3	150	SPRINKLER SYSTEM WATER PUMP	32
33										34
35	SEWAGE TREATMENT	30	2	7200						36
37						-	-	-	SPACE	38
39	SPACE	-	-	-		-	-	-	SPACE	40
41	SPACE	-	-	-		-	-	-	SPACE	42

SOLID NEUTRAL / NEUTRAL WIRE (W)

TOTAL CONNECTED LOAD (VA): A∅= 66467 B∅= 62867 C∅= 47332

GROUND BUS / GROUND WIRE (G)

PANEL: LP-1
LOCATION: DRESSING ROOM
FEEDER SOURCE: MDP-1
VOLTAGE: 240/120V, 1Ø, 2W, 125A ML
TYPE: SQUARE D TYPE QO LOAD CENTER RECESSED

CKT. NO.	LOAD DESCRIPTION / LOCATION	BREAKER AMP	BREAKER POLE	LOAD (VA)	AB BB	LOAD (VA)	BREAKER POLE	BREAKER AMP	LOAD DESCRIPTION / LOCATION	CKT. NO.
1	FLUORESCENT LIGHTING / PERSONNEL DOOR LIGHTS	20	1	1600		1260	1	20	DUPLEX RECEPTACLES	2
3	LIGHTING / MECHANICAL VENT	20	1	1600		3000	2	30	40 GALLON WATER HEATER	4
5	1ST FLOOR EMERGENCY / EXIT LIGHTING	20	1	1600						6
7	WEATHER PROOF RECEPTACLES GFI CIRCUIT	20	1	1260		1600	1	20	TRACK LIGHTING	8
9	CHANDELIER / HVAC SERVICE LIGHTING	20	1	1600		900	1	20	BALCONY LIGHTING	10
11	BAPTISMAL WATER HEATER	30	2	4800		1000	2	30	BAPTISMAL PUMP	12
13										14
15	AUDIO EQUIPMENT RECEPTACLES	20	1	1600		1600	1	20	AUDIO EQUIPMENT RECEPTACLES	16
17	DUPLEX RECEPTACLES	20	1	1260		900	1	20	BALCONY LIGHTING	18
19	SPACE	-	-	-		-	-	-	SPACE	20
21	SPACE	-	-	-		-	-	-	SPACE	22
23	SPACE	-	-	-		-	-	-	SPACE	24
25	SPACE	-	-	-		-	-	-	SPACE	26
27	SPACE	-	-	-		-	-	-	SPACE	28
29	SPACE	-	-	-		-	-	-	SPACE	30
31	SPACE	-	-	-		-	-	-	SPACE	32

SOLID NEUTRAL / NEUTRAL WIRE (W)

TOTAL CONNECTED LOAD (VA): A∅= 13520 B∅= 12060

GROUND BUS / GROUND WIRE (G)

PANEL: LP-2
LOCATION: CORRIDOR
FEEDER SOURCE: MDP-1
VOLTAGE: 240/120V, 1Ø, 2W, 125A ML
TYPE: SQUARE D TYPE QO LOAD CENTER RECESSED

CKT. NO.	LOAD DESCRIPTION / LOCATION	BREAKER AMP	BREAKER POLE	LOAD (VA)	AB BB	LOAD (VA)	BREAKER POLE	BREAKER AMP	LOAD DESCRIPTION / LOCATION	CKT. NO.
1	DUPLEX RECEPTACLES	20	1	1260		1260	1	20	DUPLEX RECEPTACLES	2
3	DUPLEX RECEPTACLES	20	1	1260		1260	1	20	DUPLEX RECEPTACLES	4
5	DISHWASHER	20	1	1400		1260	1	20	REFRIGERATOR	6
7	WEATHER PROOF RECEPTACLES GFL CIRCUIT	20	1	1260		1600	1	20	FLUORESCENT LIGHTING / CLOSET LIGHT	8
9	FLUORESCENT LIGHTING	20	1	1600		600	1	20	EXTERIOR LIGHTING	10
11	1ST FLOOR WOMEN TOILET ROOM LIGHTING / MECHANICAL VENT	20	1	800		800	1	20	1ST FLOOR MEN TOILET ROOM LIGHTING / MECHANICAL VENT	12
13	KITCHEN / STORAGE / CRY ROOM / JANITORS CLOSET LIGHTING	20	1	1600		4500	2	30	50 GALLON WATER HEATER	14
15	2ND FLOOR EMERGENCY / EXIT LIGHTING	20	1	1600						16
17	DUPLEX RECEPTACLES	20	1	1260		1260	1	20	DUPLEX RECEPTACLES	18
19	FLUORESCENT LIGHTING	20	1	1600		800	1	20	2ND FLOOR WOMEN TOILET ROOM LIGHTING / MECHANICAL VENT	20
21	2ND FLOOR MEN TOILET ROOM LIGHTING / MECHANICAL VENT	20	1	800		1600	1	20	FLUORESCENT LIGHTING	22
23	FLUORESCENT LIGHTING	20	1	1600		1600	1	20	FLUORESCENT LIGHTING	24
25	FUTURE EXTERIOR LIGHTING	30	2	-		4500	2	30	50 GALLON WATER HEATER	26
27										28
29	RESCUE ASSISTANCE LIGHT	20	1	800		800	1	20	ATTIC HEATER	30
31	SPACE	-	-	-		-	-	-	SPACE	32

SOLID NEUTRAL / NEUTRAL WIRE (W)

TOTAL CONNECTED LOAD (VA): A∅= 20600 B∅= 18480

GROUND BUS / GROUND WIRE (G)

ATTIC HEATING FOR SPRINKLER SYSTEM

CONTRACTOR TO PROVIDE ENOUGH UNIT HEATERS (DAYTON GRAINGER 3UF89 OR EQUAL 5 @ 500 BTU) FOR 250 MBH TO MAINTAIN ATTIC TEMPERATURE OF 40°F MINIMUM WITH OUTSIDE TEMPERATURE OF 20°F.
PROVIDE SAFE MOUNTING THERMOSTAT CONTROL SEPERATE HEATERS FOR UNIFORM HEAT DISTRIBUTION.

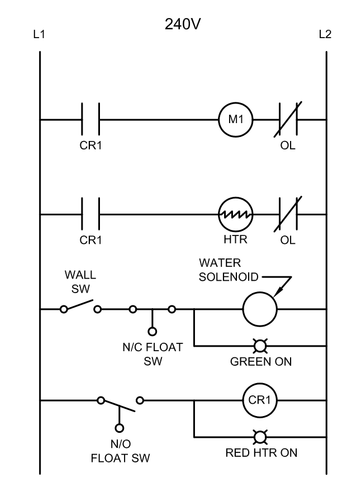

BAPTISMAL CONTROL CIRCUIT

N.T.S.

2nd FLOOR ELECTRICAL PLAN

EUGENE WELLINGTON
ALLEN ROAD
SLIDELL, LOUISIANA

EL-BETHEL PENTECOSTAL CHURCH

DAMMON ENGINEERING. INC.
1095 FLORIDA AVENUE 985-649-5832 SLIDELL, LA. 70458
DAMMONENGINEERING.COM

SCALE:AS NOTED

FILE:

JOB NO. 1819

DATE: 3-29-07

SHEET 18

E-2

OF 22