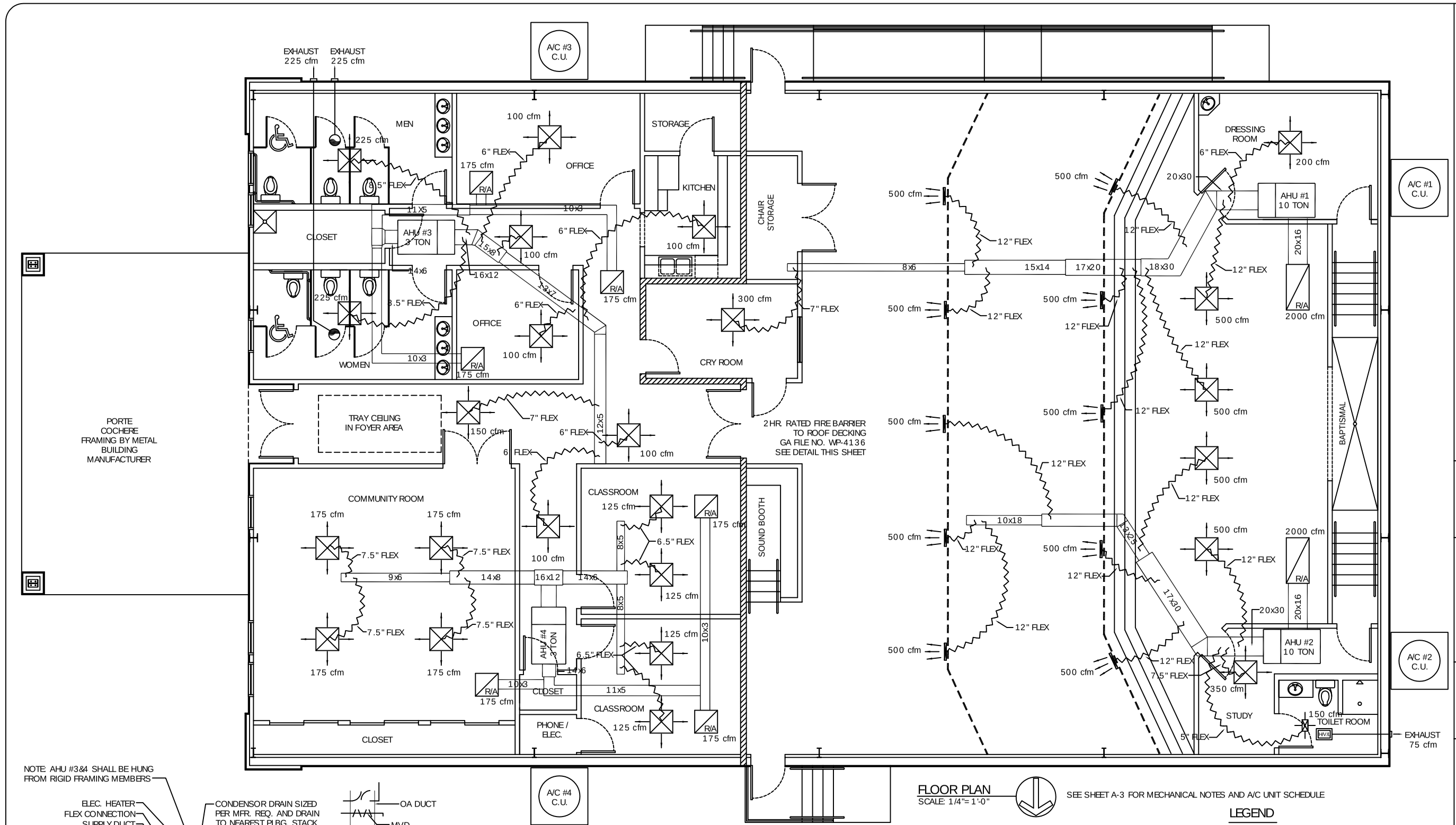

FLOOR PLAN
SCALE: 1/4"= 1'-0"

SEE SHEET A-3 FOR MECHANICAL NOTES AND A/C UNIT SCHEDULE

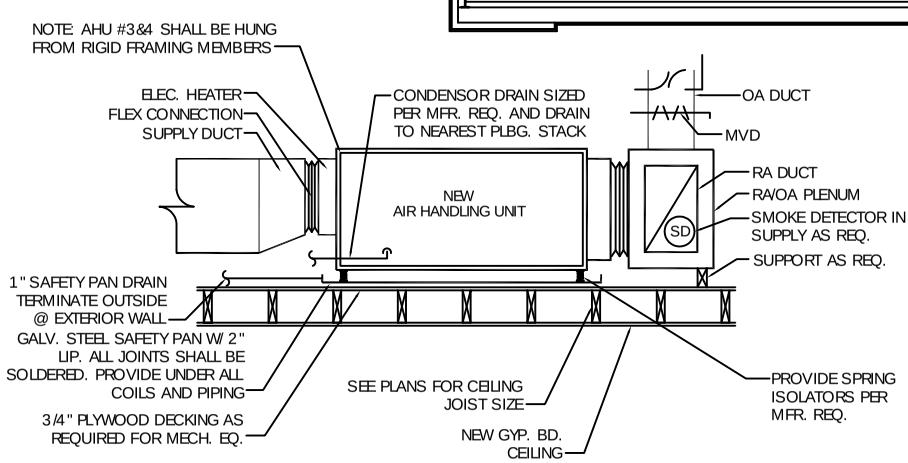

TYPICAL HORIZONTAL AHU DETAIL
SCALE: N.T.S.

FRESH AIR REQUIREMENTS PER IMC 2003, TABLE 403.3

ROOM NAME	SQUARE FEET	CFM O.A. / OCC.	CFM O.A.	A/C ZONE	TOTAL REQ. O.A.
A/C #1-2 - TOTAL 2100 s.f.					
CORRIDORS	1500	15	3375	1	4,005 CFM
STAGE	600	15	630		
A/C #3 - TOTAL 1376 s.f.					
TOILET ROOMS	330	75 / WC	450	2	670 CFM
OFFICES	260	20	40		
CRY ROOM	115	20	154		
KITCHEN	90	15	26		
A/C #4 - TOTAL 1382 s.f.					
COMMUNITY ROOM	508	15	381	3	670 CFM
CORRIDOR	524	.05 / s.f.	26.2		
CLASSROOMS	350	15	262		

AIR BALANCE SCHEDULE

	AHU-1	AHU-2	AHU-3	AHU-4	EF-1	EF-2
OUTSIDE AIR FLOW (CFM)	2002.5	2002.5	670	670		
RETURN AIR FLOW (CFM)	1997.5	1997.5	530	530		
SUPPLY AIR FLOW (CFM)	4000	4000	1200	1200		
EXHAUST AIR FLOW (CFM)					225	75
BUILDING PRESSURE (CFM)	+ 2002.5	+ 2002.5	+ 670	+ 670	-225	-75
QUANTITIES	1	1	1	1	2	1
TOTAL PRESSURIZATIONS	+ 2002.5	+ 2002.5	+ 670	+ 670	-450	-75
REMARKS						
RESULTING BUILDING PRESSURIZATION (CFM) = + 4820						

LEGEND

- INDICATES NEW CEILING DIFFUSER - CFM AS NOTED - 12 x 12 UNLESS OTHERWISE NOTED.
- INDICATES NEW RETURN AIR CEILING. RETURN AIR DUCT TO BE RECTANGULAR, SIZE AS INDICATED.
- EXHAUST FAN
- A/C UNIT
- THERMOSTAT
- INDICATES NEW SHEET METAL DUCTWORK, SIZES INDICATED ARE SHEET METAL DIMENSIONS. REFER TO SPECIFICATIONS FOR TYPE OF INSULATION.
- INDICATES NEW PRE-INSULATED FLEXIBLE DUCT SIZE PER PLAN - MAX LENGTH 10'-0"

DAMMON ENGINEERING, INC.

CHIEF ENGINEER
EMMETT DAMMON, P.E.

CHIEF ARCHITECT
ROBERT WILTSE

1095 FLORIDA AVENUE
SLIDELL, LA. 70458
OFFICE: 985-649-5832
FAX: 985-641-5950

WEBSITE:
WWW.DAMMONENGINEERING.COM

EMAIL:
DAMMONENG@BELLSOUTH.NET

ARCHITECTURE
ENGINEERING
STUDIES
PLANNING
INVESTIGATION
EXPERT WITNESS

EL-BETHEL PENTECOSTAL CHURCH

REV. EUGENE WELLINGTON
ALLEN ROAD
SLIDELL, LA

MECHANICAL PLAN

REV:

SCALE: AS NOTED
JOB#: 1819A
DATE: 11-19-08
SHEET 18

M-1

OF 20