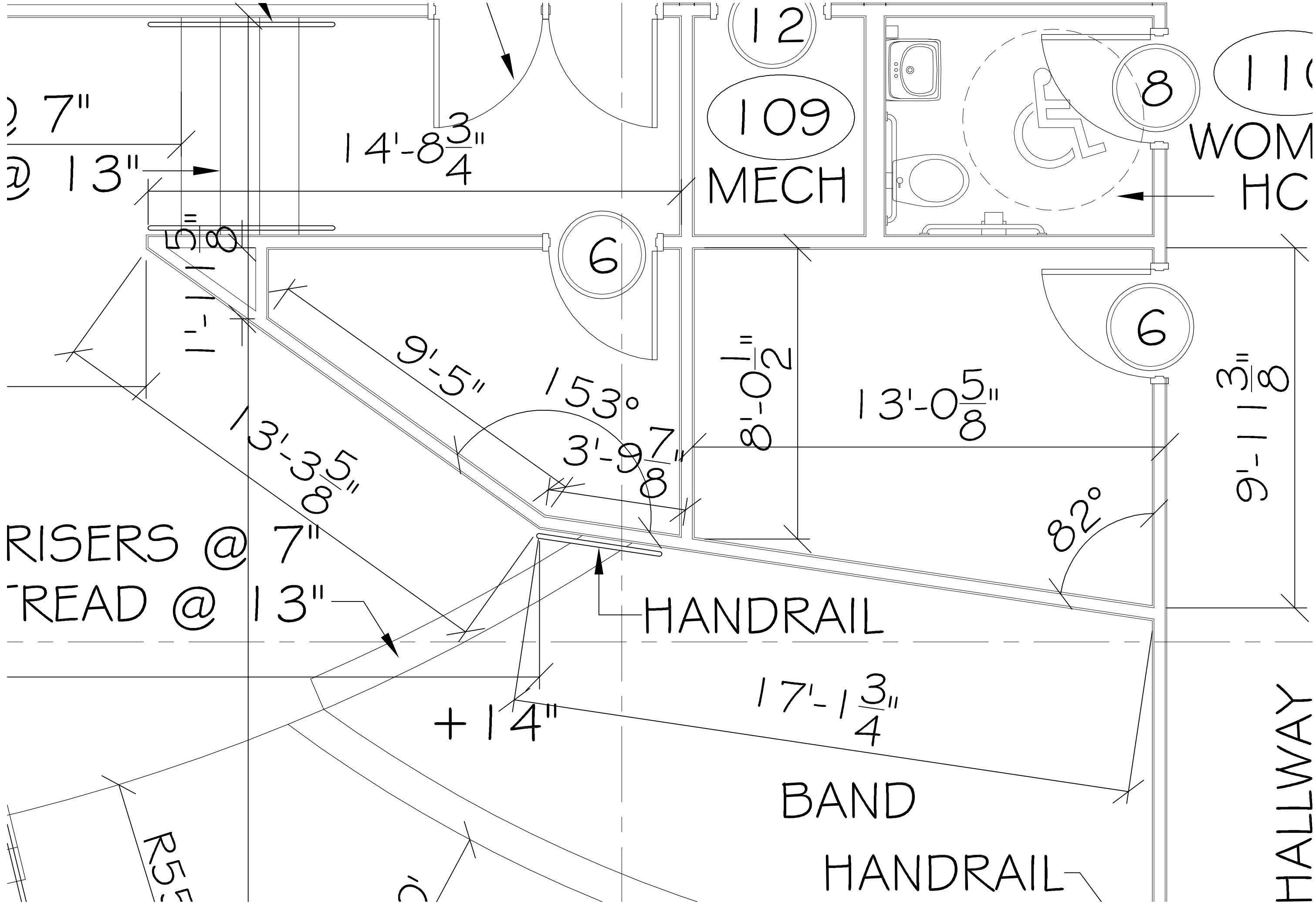
12
109
MECH
8
WOM
HC
6
6
14'-8 3/4"
7"
@ 13"
5 1/8"
1'-1 1/8"
9'-5"
153°
13'-3 5/8"
3'-9 7/8"
8'-0 1/2"
13'-0 5/8"
9'-1 1/8"
82°
RISERS @ 7"
TREAD @ 13"
HANDRAIL
+14"
17'-1 3/4"
BAND
HANDRAIL
R55
HALLWAY