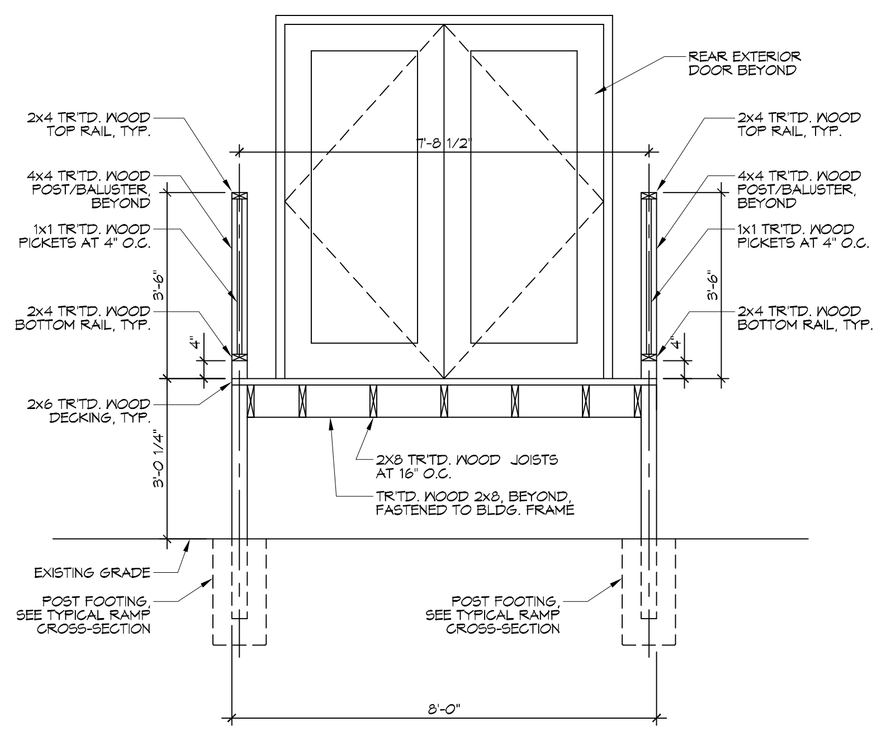

3 PORCH SECTION
SCALE: 1/2"=1'-0"
PORCH AT DOUBLE EXTERIOR DOOR

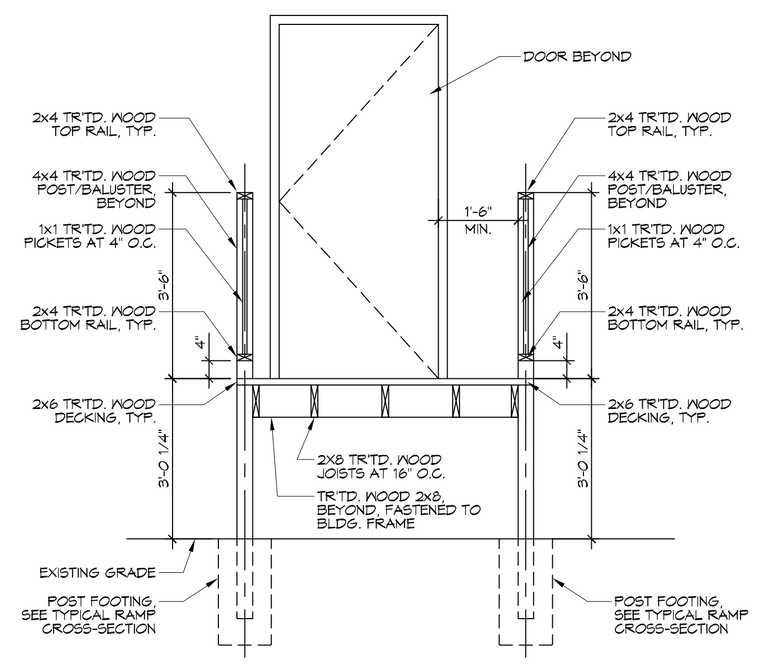

4 PORCH SECTION
SCALE: 1/2"=1'-0"
PORCH AT SINGLE EXTERIOR DOOR

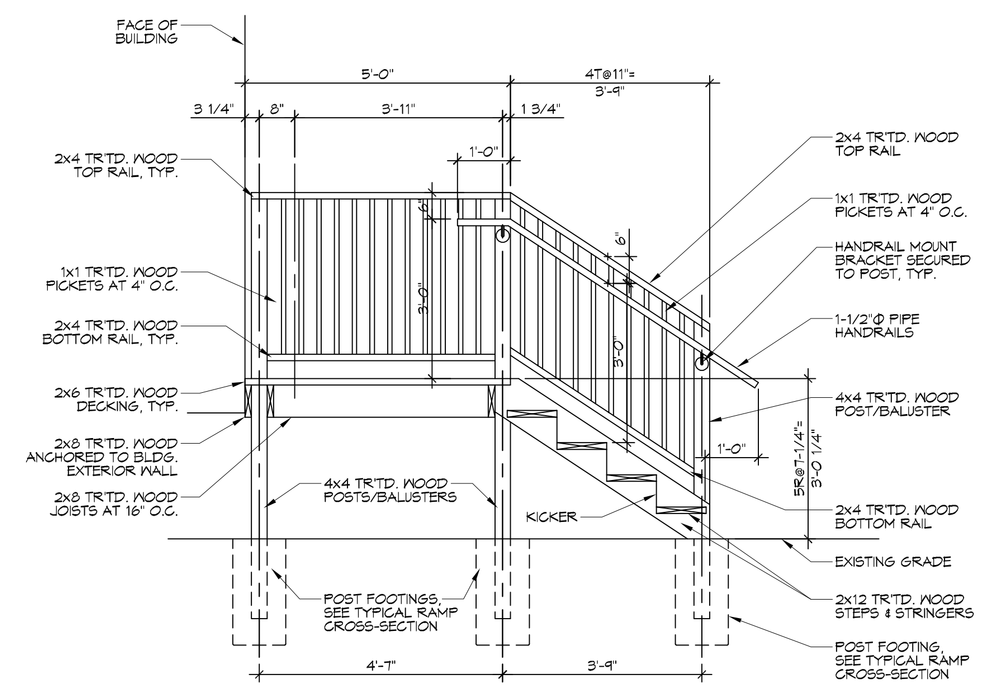

5 TYP. PORCH & STAIR SECTION
SCALE: 1/2"=1'-0"
PORCH AT SINGLE OR DOUBLE EXTERIOR DOOR

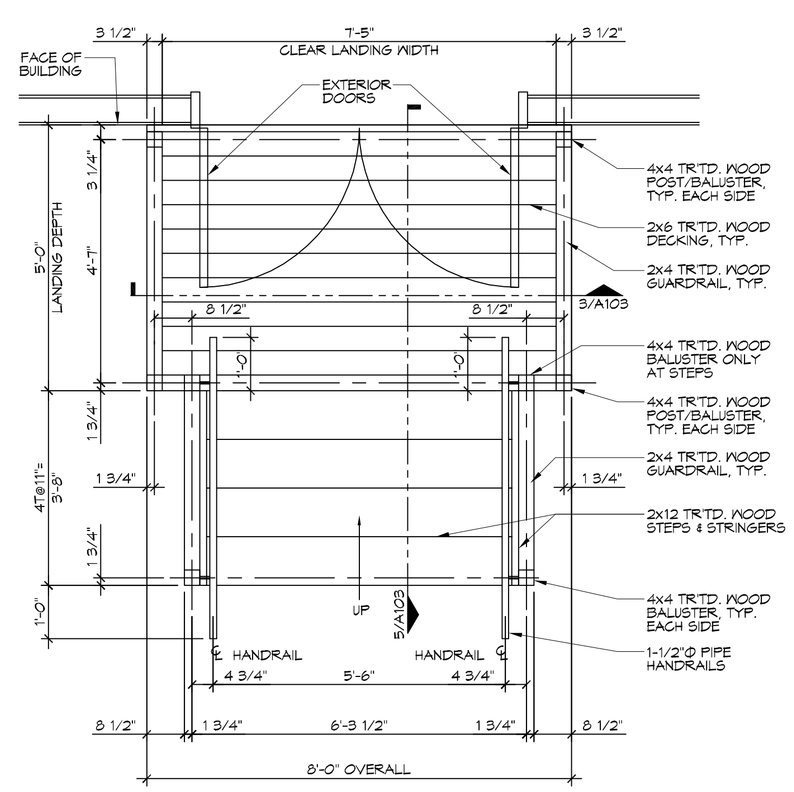

2 PORCH/STAIRS PLAN
SCALE: 1/2"=1'-0"
PORCH & STAIRS AT DOUBLE EXTERIOR DOOR

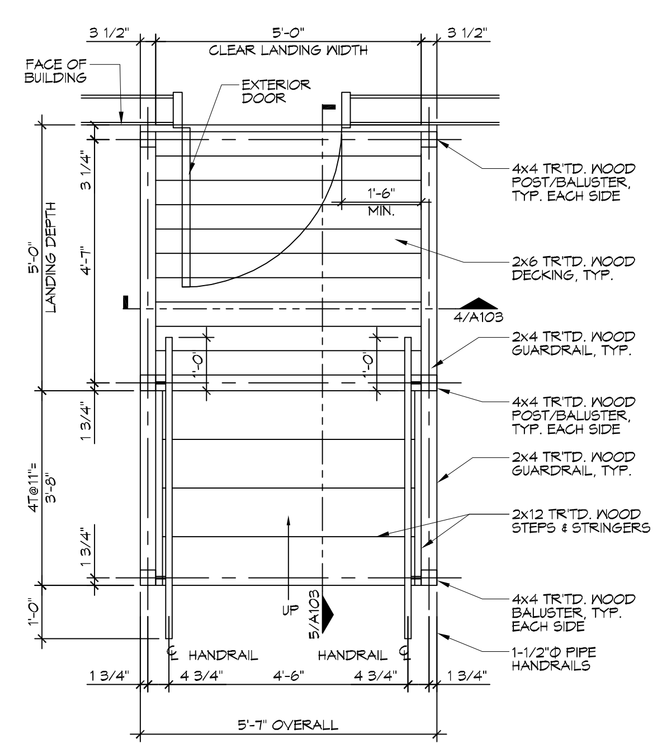

1 PORCH/STAIRS PLAN
SCALE: 1/2"=1'-0"
PORCH & STAIRS AT SINGLE EXTERIOR DOOR

DAMMON ENGINEERING, INC.
LOUISIANA & MISSISSIPPI
www.dammonengineering.com
info@dammonengineering.com
PH: 985.649.5832 F: 985.644.5990
Chief Engineer: Brian Mistich, PE
4466 Oliver Swamp Trail
Slidell, LA 70458

REVISIONS

#	DESCRIPTION	DATE

STATE OF LOUISIANA
BRIAN A. MISTICH
License No. 30187
PROFESSIONAL ENGINEER

CHRISTIAN LOVE CHURCH
3770 LESSETT ROAD
SLIDELL, LA 70460

JOB No:	2295	DATE:	4/15/2017
DRAWN BY:	JT	CHECKED BY:	BAM

SHEET TITLE:
PORCHES & STAIRS - PLANS & DETAILS

DRAWING NUMBER:
A103

SHEET No: 9 of 15