FILE NAME: J:\-- CHURCHES\2295 -- Christian Love Church\Drawings\Current Drawings\S102 -- Building Section Plan.dwg PLOT DATE & TIME: Tuesday, January 10, 2023 9:27:27 AM

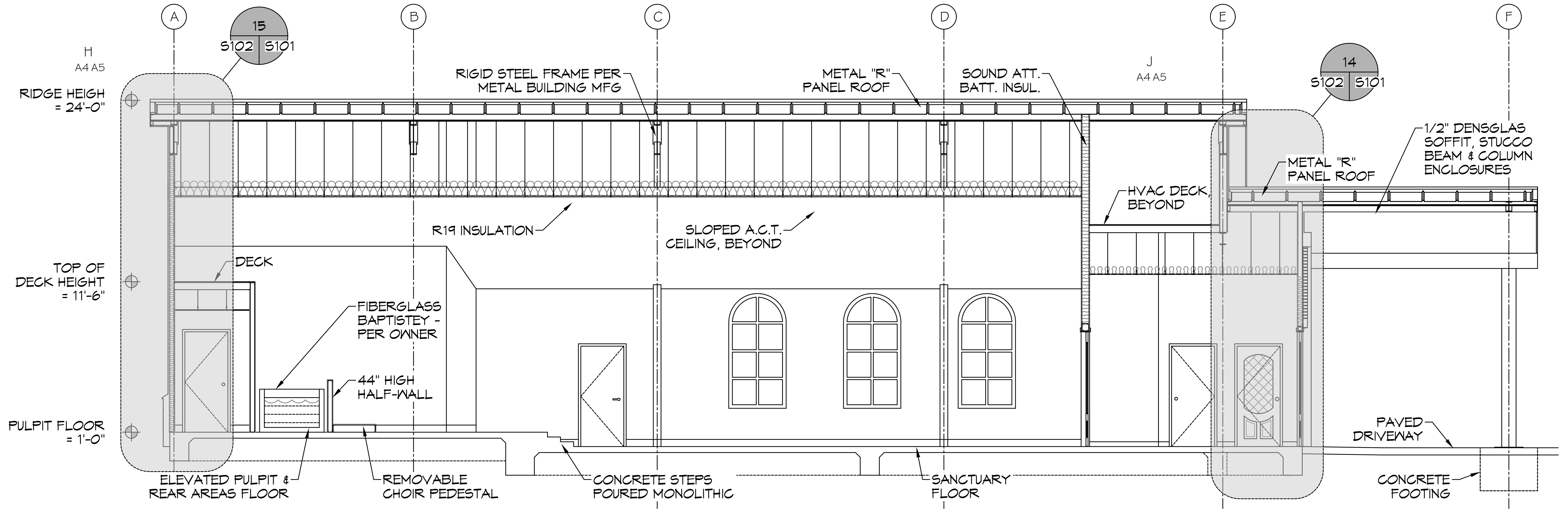
A
B
C
D
E
F
H
A4 A5
J
A4 A5
15
S102 S101
14
S102 S101
RIDGE HEIGH = 24'-0"
TOP OF DECK HEIGHT = 11'-6"
PULPIT FLOOR = 1'-0"
RIGID STEEL FRAME PER METAL BUILDING MFG
METAL "R" PANEL ROOF
SOUND ATT. BATT. INSUL.
1/2" DENSGLAS SOFFIT, STUCCO BEAM & COLUMN ENCLOSURES
METAL "R" PANEL ROOF
HVAC DECK, BEYOND
R19 INSULATION
SLOPED A.C.T. CEILING, BEYOND
DECK
FIBERGLASS BAPTISTEY - PER OWNER
44" HIGH HALF-WALL
PAVED DRIVEWAY
ELEVATED PULPIT & REAR AREAS FLOOR
REMOVABLE CHOIR PEDESTAL
CONCRETE STEPS POURED MONOLITHIC
SANCTUARY FLOOR
CONCRETE FOOTING

18 BUILDING SECTION

S102 | A101

SCALE: 3/16" = 1'-0"

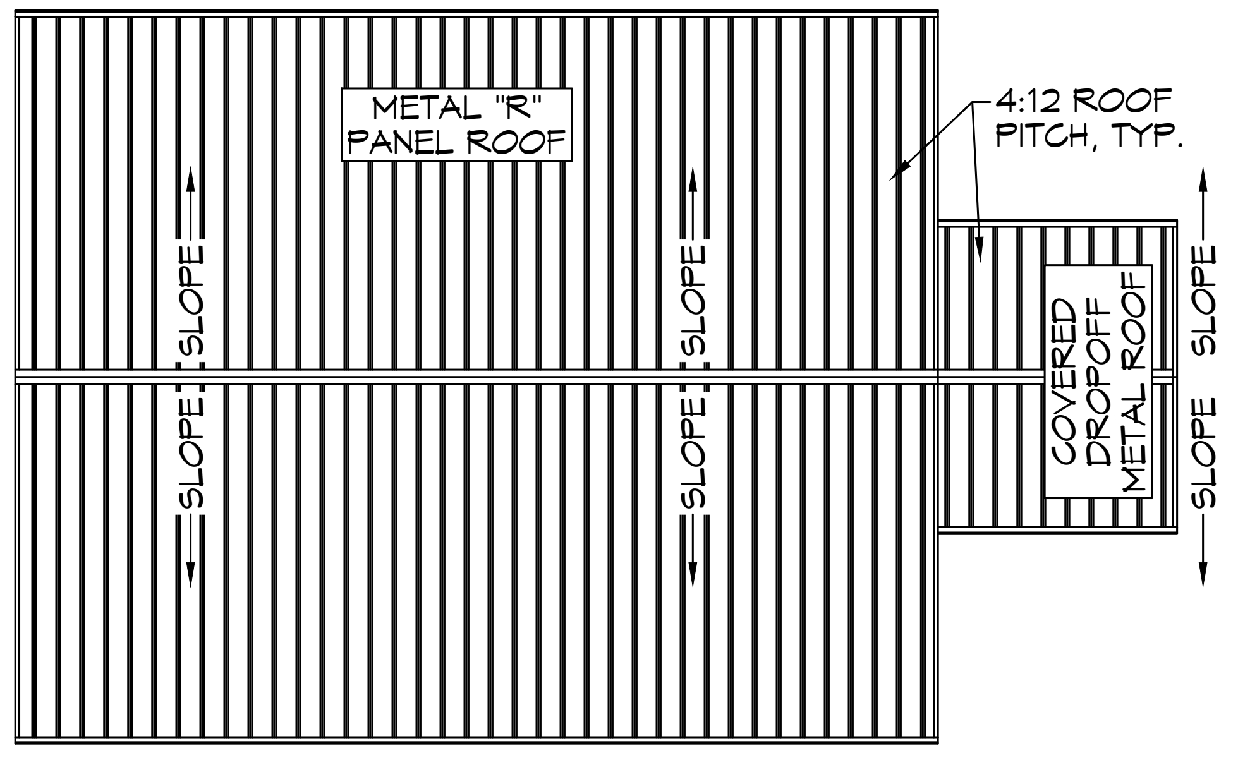
METAL "R" PANEL ROOF
4:12 ROOF PITCH, TYP.
SLOPE
SLOPE
SLOPE
SLOPE
SLOPE
SLOPE
COVERED DROPOFF METAL ROOF

21 ROOF PLAN

SCALE: 1/16 "=1'-0"

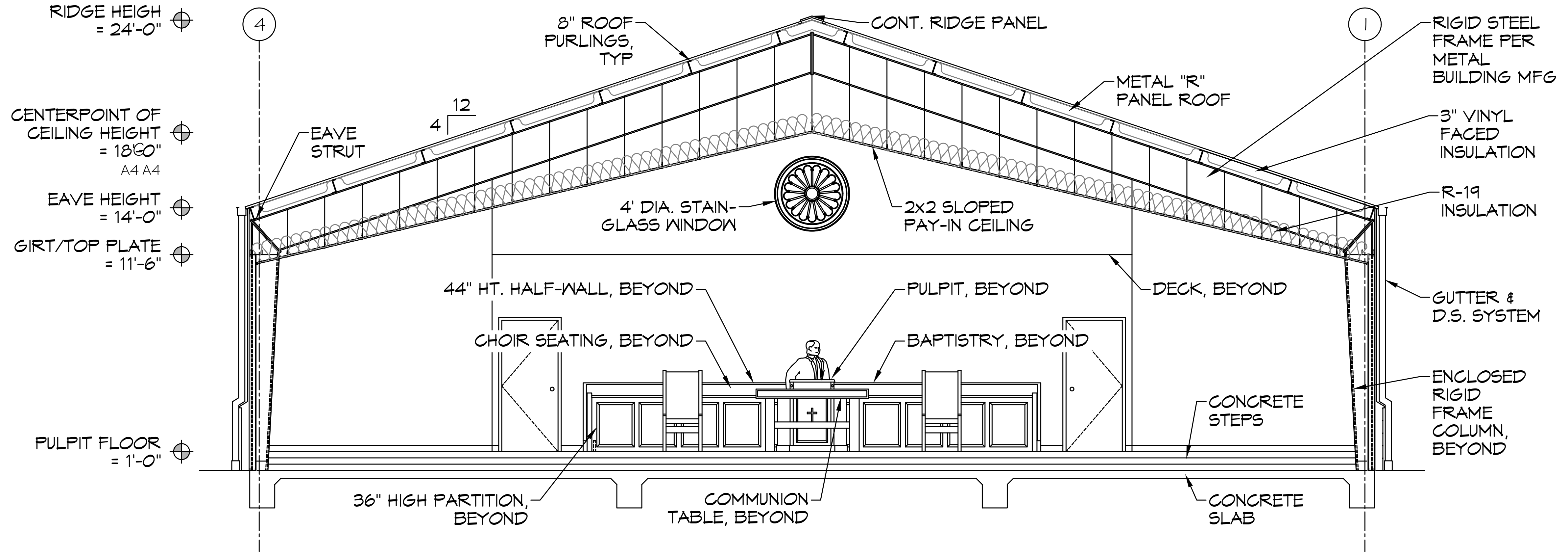
RIDGE HEIGH = 24'-0"
CENTERPOINT OF CEILING HEIGHT = 18'-0"
A4 A4
EAVE HEIGHT = 14'-0"
GIRT/TOP PLATE = 11'-6"
PULPIT FLOOR = 1'-0"
4
I
8" ROOF PURLINGS, TYP
CONT. RIDGE PANEL
METAL "R" PANEL ROOF
RIGID STEEL FRAME PER METAL BUILDING MFG
3" VINYL FACED INSULATION
R-19 INSULATION
4 12
EAVE STRUT
4' DIA. STAIN-GLASS WINDOW
2x2 SLOPED PAY-IN CEILING
44" HT. HALF-WALL, BEYOND
PULPIT, BEYOND
DECK, BEYOND
GUTTER & D.S. SYSTEM
CHOIR SEATING, BEYOND
BAPTISTRY, BEYOND
ENCLOSED RIGID FRAME COLUMN, BEYOND
CONCRETE STEPS
36" HIGH PARTITION, BEYOND
COMMUNION TABLE, BEYOND
CONCRETE SLAB

19 BUILDING SECTION

S102 | A101

SCALE: 3/16" = 1'-0"

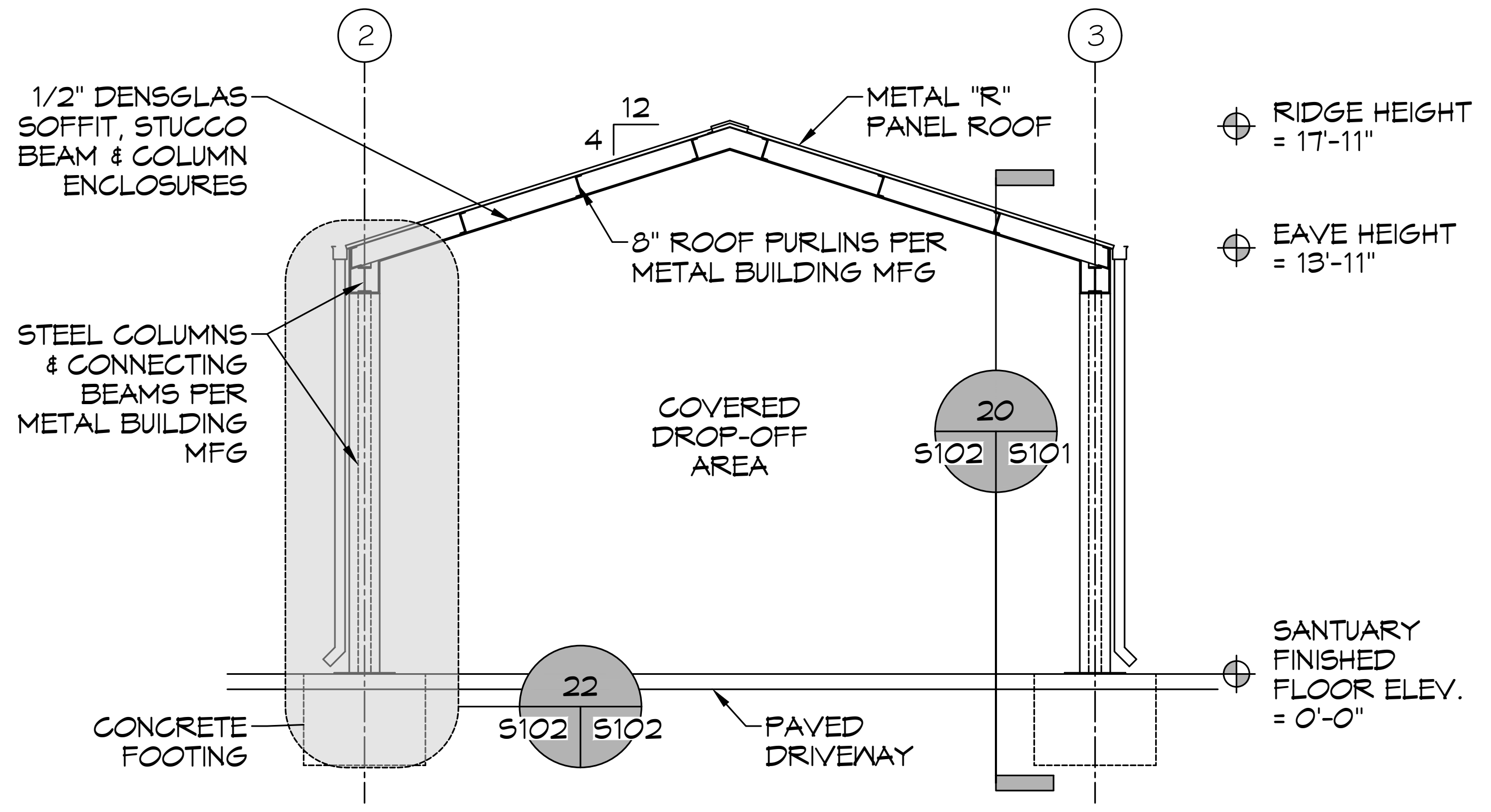
2
3
1/2" DENSGLAS SOFFIT, STUCCO BEAM & COLUMN ENCLOSURES
4 12
METAL "R" PANEL ROOF
RIDGE HEIGHT = 17'-11"
8" ROOF PURLINS PER METAL BUILDING MFG
EAVE HEIGHT = 13'-11"
STEEL COLUMNS & CONNECTING BEAMS PER METAL BUILDING MFG
COVERED DROP-OFF AREA
20
S102 S101
SANTUARY FINISHED FLOOR ELEV. = 0'-0"
22
S102 S102
CONCRETE FOOTING
PAVED DRIVEWAY

20 DRIVE THRU CANOPY SECTION

S102 | A101

SCALE: 3/16" = 1'-0"

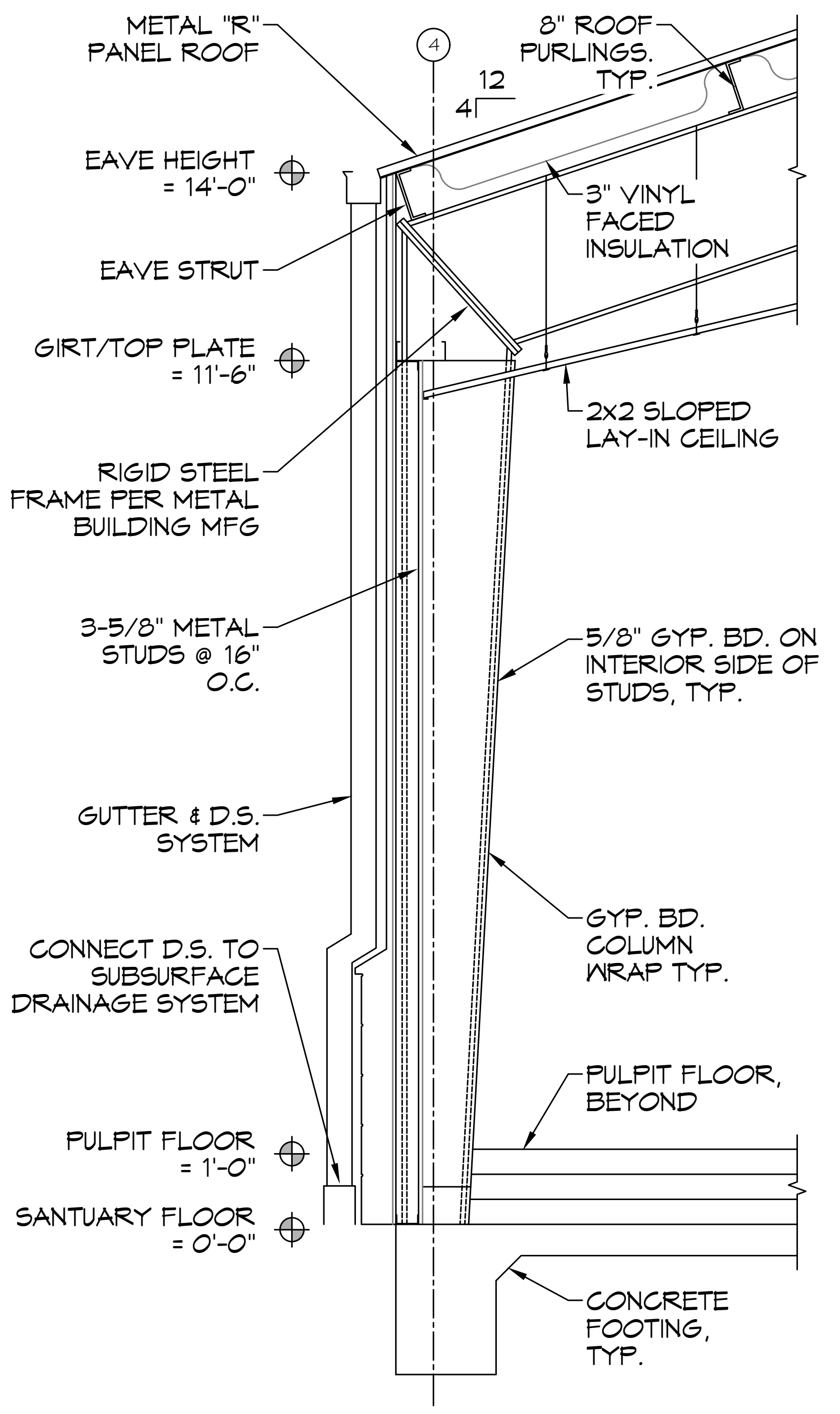
METAL "R" PANEL ROOF
4
12
4
8" ROOF PURLINGS. TYP.
EAVE HEIGHT = 14'-0"
3" VINYL FACED INSULATION
EAVE STRUT
GIRT/TOP PLATE = 11'-6"
2x2 SLOPED LAY-IN CEILING
RIGID STEEL FRAME PER METAL BUILDING MFG
3-5/8" METAL STUDS @ 16" O.C.
5/8" GYP. BD. ON INTERIOR SIDE OF STUDS, TYP.
GUTTER & D.S. SYSTEM
GYP. BD. COLUMN WRAP TYP.
CONNECT D.S. TO SUBSURFACE DRAINAGE SYSTEM
PULPIT FLOOR, BEYOND
PULPIT FLOOR = 1'-0"
SANTUARY FLOOR = 0'-0"
CONCRETE FOOTING, TYP.

22 WALL SECTION

S102 | S102

SCALE: 1/8" = 1'-0"

DAMMON
ENGINEERING, INC.
LOUISIANA & MISSISSIPPI

Chief Engineer: Brian Mistich, PE
554 Old Spanish Trail
Slidell, LA 70458

www.dammonengineering.com
info@dammonengineering.com
PH: 985.649.5832 F: 985.641.5950

REVISIONS

#	DESCRIPTION	DATE

CHRISTIAN LOVE CHURCH

37710 LEGGETT ROAD
SLIDELL, LA 70460

JOB No: 2295
DATE: 11-21-2022
DRAWN BY: CKD
CHECKED BY: BAM

The above drawings and specifications, designs and arrangements represented thereby are and shall remain the property of Dammon Engineering, and no part thereof shall be copied, disclosed to others, or used in connection with any work or project other than the specific project for which the have been prepared and developed without written consent of Dammon Engineering. Visual contact with these drawings or specifications shall constitute conclusive evidence of acceptance of these restrictions.

SHEET TITLE:
BUILDING SECTION

DRAWING NUMBER:
S102

SHEET No: 7 of 16