NOTE!
SEE SHEET C-3 FOR PAVING AND DRAINAGE NOTES/DETAILS.

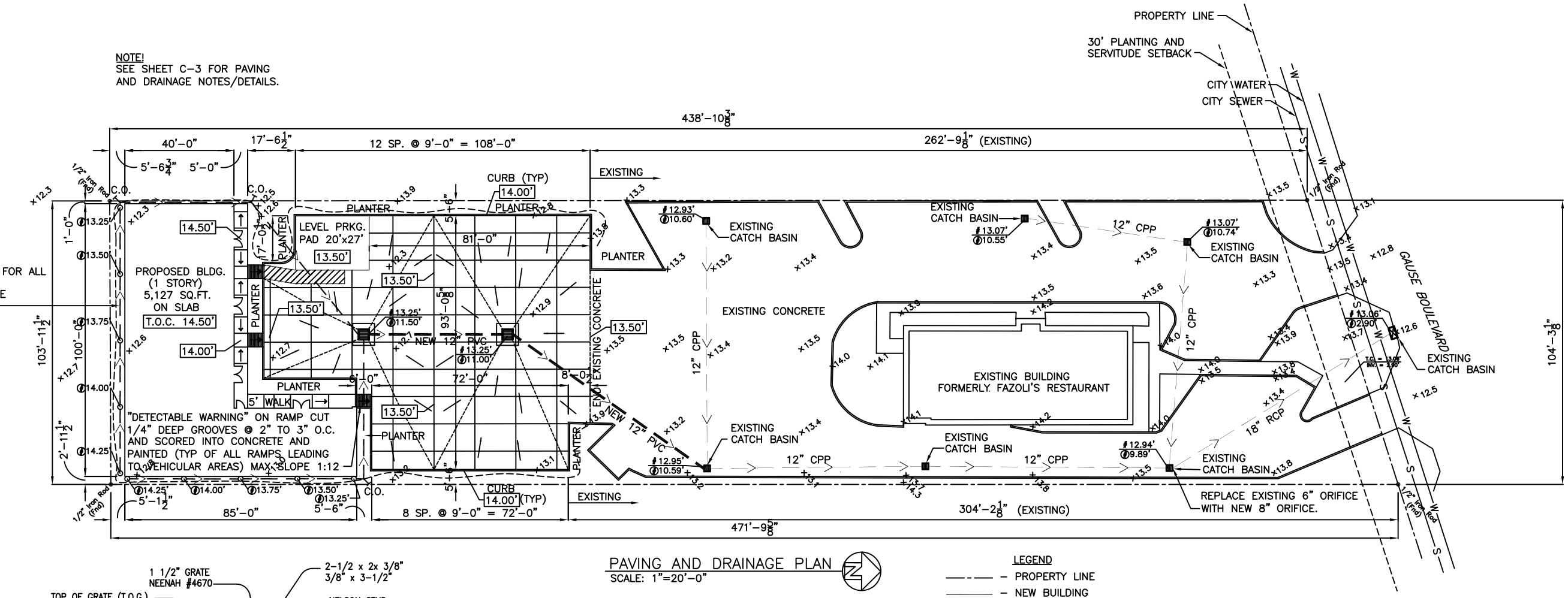

PAVING AND DRAINAGE PLAN
SCALE: 1"=20'-0"

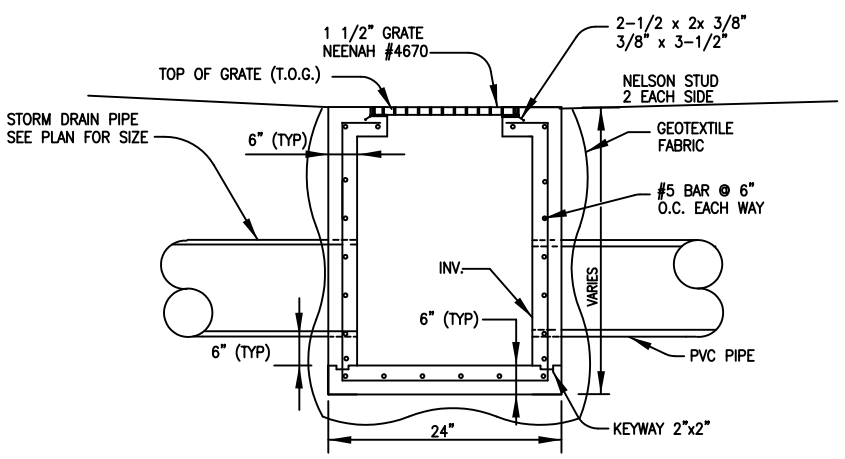

TYPICAL DROP INLET
N.T.S.

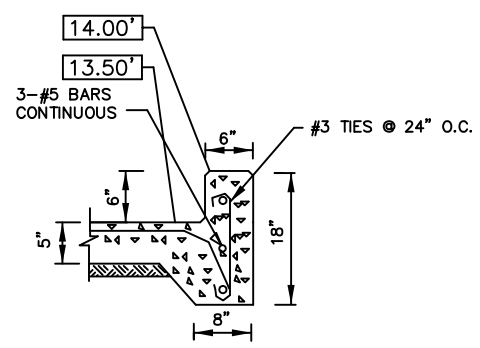

(TYP.) CURB DETAIL
N.T.S.

LEGEND
- PROPERTY LINE
- NEW BUILDING
- SETBACK
- NEW DRAINAGE LINE
- NEW DROP INLET w/TEMPORARY SILT FENCING
- EXPANSION JOINT (30'x45')
- CONTROL JOINT (10'x15')
- SLOPE LINES
- # T.O. GRATE ELEVATION
- INVERT ELEVATION
- 00.00 NEW ELEVATIONS
- 00.00 EXISTING ELEVATIONS
- TEMPORARY SILT FENCING
- S SEWER LINE
- W WATER LINE

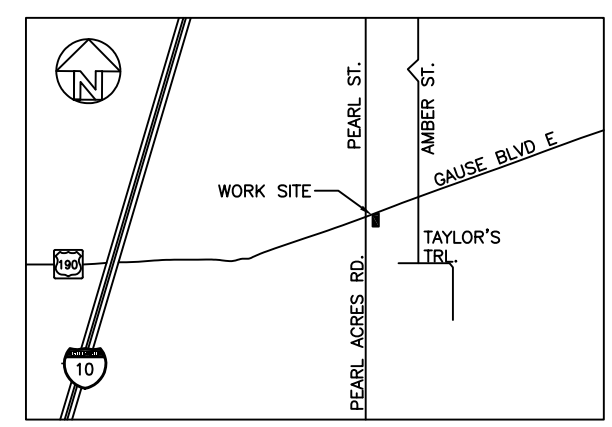

VICINITY MAP
SCALE: N.T.S.

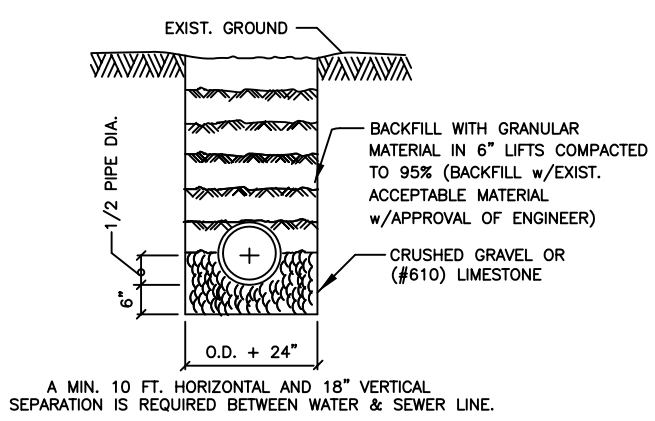

A MIN. 10 FT. HORIZONTAL AND 18" VERTICAL SEPARATION IS REQUIRED BETWEEN WATER & SEWER LINE.

PIPE BEDDING DETAIL
FOR SEWER & WATER LINE
N.T.S.

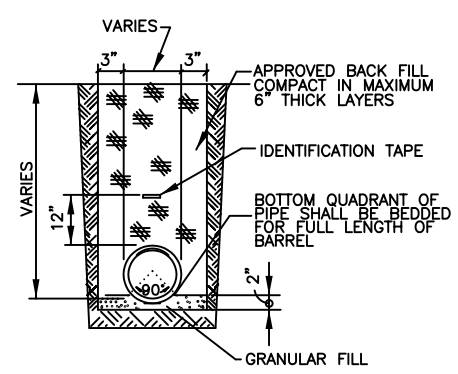

DRAIN PIPE BEDDING
N.T.S.

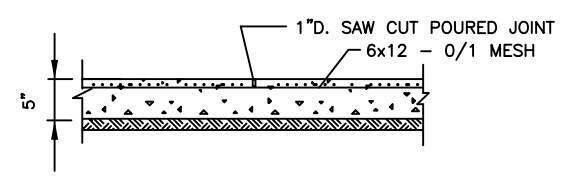

CONTRACTION JOINT
N.T.S.

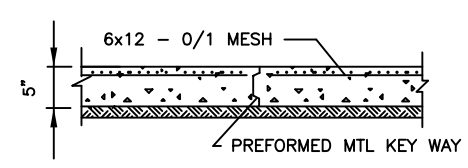

CONSTRUCTION JOINT
N.T.S.

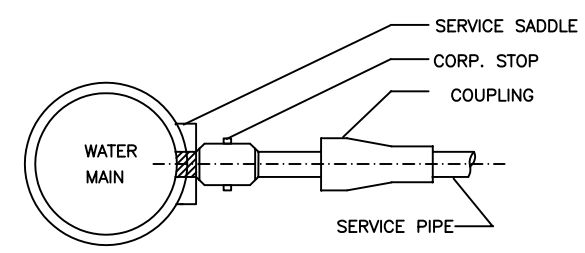

SERVICE CONNECTIONS
FOR TAPS TO MAIN
N.T.S.

REVISED 01-16-06

PAVING AND DRAINAGE PLAN

GRISWOLD PROPERTIES
2117 GAUSE BLVD. E
SLIDELL, LOUISIANA

NEW OFFICE BUILDING

DAMMON ENGINEERING, INC.
1095 FLORIDA AVENUE 985-649-5832 SLIDELL, LA. 70458
DAMMONENGINEERING.COM

SCALE:AS NOTED
FILE:
JOB NO.1550
DATE:11-15-05
SHEET 3
C-2
OF 13