4.16 WATER CLOSETS.

4.16.1 GENERAL. ACCESSIBLE WATER CLOSETS SHALL COMPLY WITH 4.16.

4.16.2 CLEAR FLOOR SPACE. CLEAR FLOOR SPACE FOR WATER CLOSETS NOT IN STALLS SHALL COMPLY WITH 4.16. CLEAR FLOOR SPACE MAY BE ARRANGED TO ALLOW EITHER A LEFT-HANDED OR RIGHT-HANDED APPROACH.

4.16.3 HEIGHT. THE HEIGHT OF WATER CLOSETS SHALL BE 17" TO 19" (430mm TO 480mm), MEASURED TO THE TOP OF THE TOILET SEAT. SEATS SHALL NOT BE SPRING TO RETURN TO A LIFTED POSITION (SEE FIG. 31).

4.16.4 GRAB BARS. GRAB BARS FOR WATER CLOSETS NOT LOCATED IN STALLS SHALL COMPLY WITH 4.26 AND FIG. 31. THE GRAB BAR BEHIND THE WATER CLOSET SHALL BE 36" (910mm) MINIMUM.

4.16.5 FLUSH CONTROLS. FLUSH CONTROLS SHALL BE HAND OPERATED OR AUTOMATIC AND SHALL COMPLY WITH 4.27.4. CONTROLS FOR FLUSH VALVES SHALL BE MOUNTED ON THE WIDE SIDE OF TOILET AREAS NO MORE THAN 44" (1120mm) ABOVE THE FLOOR.

4.16.6 DISPENSERS. TOILET PAPER DISPENSERS SHALL BE INSTALLED WITHIN REACH, AS SHOWN IN FIG. 31. DISPENSERS THAT CONTROL, DELIVER, OR THAT DO NOT PERMIT CONTINUOUS PAPER FLOW, SHALL NOT BE USED.

4.17 TOILET STALLS.

4.17.1 LOCATION. ACCESSIBLE TOILET STALLS SHALL BE ON AN ACCESSIBLE ROUTE AND SHALL MEET THE REQUIREMENTS OF 4.17.

4.17.2 WATER CLOSETS. WATER CLOSETS IN ACCESSIBLE STALLS SHALL COMPLY WITH 4.16.

4.17.3* SIZE AND ARRANGEMENT. THE SIZE AND ARRANGEMENT OF THE STANDARD TOILET STALL SHALL COMPLY WITH 4.17. STANDARD TOILET STALLS WITH A MINIMUM DEPTH OF 56" (1420mm) SHALL MAKE WALL-MOUNTED WATER CLOSETS, IF THE DEPTH OF A STANDARD TOILET STALL IS INCREASED AT LEAST 3" (76mm), SUCH A FLOOR-MOUNTED WATER CLOSET MAY BE USED. ARRANGEMENTS SHOWN FOR STANDARD TOILET STALLS MAY BE MIRRORED TO ALLOW EITHER A LEFT-OR RIGHT-HAND APPROACH. ADDITIONAL STALL SHALL BE PROVIDED IN COMPLIANCE WITH 4.22.4.
EXCEPTION: IN RESTROOMS OF ALTERATION WORK WHERE PROVISION OF A STANDARD STALL IS TECHNICALLY INFEASIBLE OR WHERE PLUMBING CODE REQUIREMENTS PREVENT COMBINING ADJACENT STALLS TO PROVIDE SPACE, EITHER ALTERNATE STALL MAY BE PROVIDED IN LIEU OF THE STANDARD STALL.

4.17.4 THE GEORGANNE. IN STANDARD STALLS, THE FRONT PARTITION AND AT LEAST ONE SIDE PARTITION SHALL PROVIDE A THE CLEARANCE OF AT LEAST 8" (203mm) ABOVE THE FLOOR. IF THE DEPTH OF THE STALL IS GREATER THAN 56" (1505mm), THEN THE THE CLEARANCE IS NOT REQUIRED.

4.17.5* DOORS. TOILET STALL DOORS, INCLUDING DOOR HARDWARE, SHALL COMPLY WITH 4.13. IF TOILET STALL APPROACH IS FROM THE LATCH SIDE OF THE STALL DOOR, CLEARANCE BETWEEN THE DOOR SIDE OF THE STALL AND ANY OBSTRUCTION MAY BE REDUCED TO A MINIMUM OF 42" (1065mm).

4.17.6 GRAB BARS. GRAB BARS MAY BE MOUNTED WITH ANY DEEMED METHOD AS LONG AS THEY HAVE A SMOOTH SURFACE AT THE LOCATIONS SHOWN IN FIG. 31 AND DO NOT OBSTRUCT THE REQUIRED CLEAR FLOOR AREA. GRAB BARS SHALL COMPLY WITH 4.26.

4.18 URINALS.

4.18.1 GENERAL. ACCESSIBLE URINALS SHALL COMPLY WITH 4.18.

4.18.2 HEIGHT. URINALS SHALL BE STALL-TYPE OR WALL-HUNG WITH AN ELONGATED RIM AT A MAXIMUM OF 17" (430mm) ABOVE THE FINISH FLOOR.

4.18.3 CLEAR FLOOR SPACE. A CLEAR FLOOR SPACE 30" BY 48" (760mm BY 1220mm) SHALL BE PROVIDED IN FRONT OF URINALS TO ALLOW FORWARD APPROACH. THIS CLEAR SPACE SHALL ADJOIN OR OVERLAP AN ACCESSIBLE ROUTE AND SHALL COMPLY WITH 4.2.4. URINAL SHIELDS THAT DO NOT EXTEND BEYOND THE FRONT EDGE OF THE URINAL RIM MAY BE PROVIDED WITH 30" (730mm) CLEARANCE BETWEEN THEM.

4.18.4 FLUSH CONTROLS. FLUSH CONTROLS SHALL BE HAND OPERATED OR AUTOMATIC, AND SHALL COMPLY WITH 4.27.4, AND SHALL BE MOUNTED NO MORE THAN 44" (1120mm) ABOVE THE FINISH FLOOR.

4.19 LAVATORIES & MIRRORS.

4.19.1 GENERAL. THE REQUIREMENTS OF 4.19 SHALL APPLY TO LAVATORY FIXTURES, VANITIES, AND BUILT-IN LAVATORIES.

4.19.2 HEIGHT & CLEARANCES. LAVATORIES SHALL BE MOUNTED WITH THE RIM OR COUNTER SURFACE NO HIGHER THAN 34" (865mm) ABOVE THE FLOOR. PROVIDE A CLEARANCE OF AT LEAST 29" (738mm) ABOVE THE FINISH FLOOR TO THE BOTTOM OF THE APRON (SEE FIG. 31).

4.19.3 CLEAR FLOOR SPACE. A CLEAR FLOOR SPACE 30" BY 48" (760mm BY 1220mm) COMPLYING WITH 4.2.4 SHALL BE PROVIDED IN FRONT OF A LAVATORY TO ALLOW FORWARD APPROACH. SUCH CLEAR FLOOR SPACE SHALL ADJOIN OR OVERLAP AN ACCESSIBLE ROUTE AND SHALL EXTEND A MINIMUM OF 19" (480mm) UNDERNEATH THE LAVATORY.

4.19.4 EXPOSED PIPES & SURFACES. HOT WATER AND DRAIN PIPES UNDER LAVATORIES SHALL BE INSULATED OR OTHERWISE CONFIGURED TO PROTECT AGAINST CONTACT. THERE SHALL BE NO SHARP OR ABRASIVE SURFACES UNDER LAVATORIES.

4.19.5 FAUCETS. FAUCETS SHALL COMPLY WITH 4.27.4. LEVER-OPERATED, PUSH-TYPE, AND ELECTRONICALLY CONTROLLED MECHANISMS ARE EXAMPLES OF ACCEPTABLE DESIGNS. IF KNEE-OPERATED VALVES ARE USED, THE FAUCET SHALL REMAIN OPEN FOR AT LEAST 10 SECONDS.

4.19.6* MIRRORS. MIRRORS SHALL BE MOUNTED WITH THE BOTTOM EDGE OF THE REFLECTING SURFACE NO HIGHER THAN 40" (1015mm) ABOVE THE FINISH FLOOR (SEE FIG. 31).

4.20 BATHTUBS.

4.20.1 GENERAL. ACCESSIBLE BATHTUBS SHALL COMPLY WITH 4.20.

4.20.2 FLOOR SPACE. CLEAR FLOOR SPACE IN FRONT OF BATHTUBS SHALL COMPLY WITH 4.20.

4.20.3 SEAT. AN IN-TUB SEAT OR A SEAT AT THE HEAD END OF THE TUB SHALL BE PROVIDED AS SHOWN IN FIG. 34. THE MINIMUM DIMENSIONS OF SEATS AND THEIR ATTACHMENTS SHALL COMPLY WITH 4.20.3. SEATS SHALL BE MOUNTED SECURELY AND SHALL NOT SLIP DURING USE.

4.20.4 GRAB BARS. GRAB BARS COMPLYING WITH 4.26 SHALL BE PROVIDED AS SHOWN IN FIG. 34.

4.20.5 CONTROLS. FAUCETS AND OTHER CONTROLS COMPLYING WITH 4.27.4 SHALL BE LOCATED AS SHOWN IN FIG. 34.

4.20.6 SHOWER UNIT. A SHOWER SPRAY UNIT WITH A HOSE AT LEAST 60" (1525mm) LONG THAT CAN BE USED AS A FIXED SHOWER HEAD OR AS A HAND-HELD SHOWER SHALL BE PROVIDED.

4.20.7 SHOWER ENCLOSURES. IF PROVIDED, ENCLOSURES FOR BATHTUBS SHALL NOT OBSTRUCT CONTROLS OR OBSTRUCT TRANSFER FROM WHEELCHAIRS ONTO SHOWER SEATS.

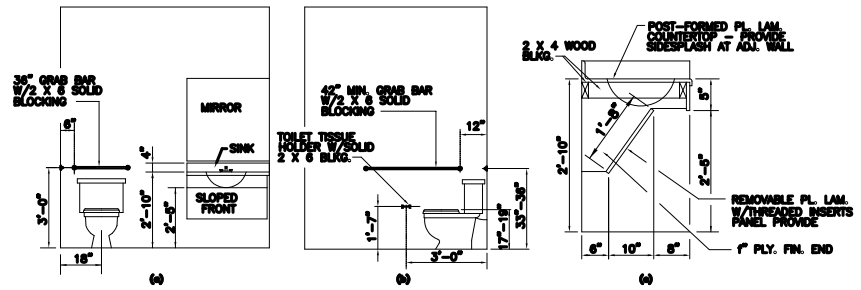

FIG. 31
LAVATORY & WATER CLOSET CLEARANCES
N.T.S.

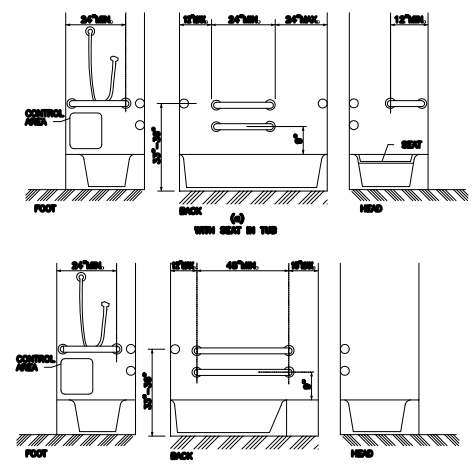

FIG. 34
GRAB BARS AT BATHTUBS
N.T.S.

4.22 TOILET ROOMS.

4.22.1 GENERAL. THE REQUIREMENTS OF 4.22 SHALL APPLY TO ACCESSIBLE TOILET ROOMS.

4.22.2 DOORS. ALL DOORS TO ACCESSIBLE TOILET ROOMS SHALL COMPLY WITH 4.13. DOORS SHALL NOT SWING INTO THE CLEAR FLOOR SPACE REQUIRED FOR ANY FIXTURE.

4.22.3 CLEAR FLOOR SPACE. THE ACCESSIBLE FIXTURES AND CONTROLS REQUIRED IN 4.22.4, 4.22.5, 4.22.6, AND 4.22.7 SHALL BE ON AN ACCESSIBLE ROUTE. AN UNOBSTRUCTED TURNING SPACE COMPLYING WITH 4.2.3 SHALL BE PROVIDED WITHIN AN ACCESSIBLE TOILET ROOM. THE CLEAR FLOOR SPACE AT FIXTURES AND CONTROLS, THE ACCESSIBLE ROUTE, AND THE TURNING SPACE MAY OVERLAP.

EXCEPTION: IN TOILET ROOMS WITH ONLY ONE WATER CLOSET AND ONE LAVATORY, A CLEAR FLOOR SPACE OF 30" BY 60" (910mm BY 1525mm) MAY BE USED IN LIEU OF THE UNOBSTRUCTED TURNING SPACE.

4.22.4 WATER CLOSETS. IF TOILET STALLS ARE PROVIDED, THEN AT LEAST ONE SHALL COMPLY WITH 4.17 ITS WATER CLOSET SHALL COMPLY WITH 4.16. IF WATER CLOSETS ARE NOT IN STALLS, THEN AT LEAST ONE SHALL COMPLY WITH 4.16.

4.22.5 URINALS. IF URINALS ARE PROVIDED, THEN AT LEAST ONE SHALL COMPLY WITH 4.18.

4.22.6 LAVATORIES AND MIRRORS. IF LAVATORIES AND MIRRORS ARE PROVIDED, THEN AT LEAST ONE OF EACH SHALL COMPLY WITH 4.19.

4.22.7 CONTROLS AND DISPENSERS. IF CONTROLS, DISPENSERS, RECEPTACLES, OR OTHER EQUIPMENT IS PROVIDED, THEN AT LEAST ONE OF EACH SHALL BE ON AN ACCESSIBLE ROUTE AND SHALL COMPLY WITH 4.27.

4.23 BATHROOM, BATHING FACILITIES, AND SHOWER ROOMS.

4.23.1 MINIMUM NUMBER. BATHROOMS, BATHING FACILITIES, OR SHOWER ROOMS REQUIRED TO BE ACCESSIBLE BY 4.1 SHALL COMPLY WITH 4.23 AND SHALL BE ON AN ACCESSIBLE ROUTE. FOR ADAPTABLE BATHROOMS IN ACCESSIBLE DWELLING UNITS, SEE 4.34.5.

4.23.2 DOORS. DOORS TO ACCESSIBLE BATHROOMS SHALL COMPLY WITH 4.13. DOORS SHALL NOT SWING INTO THE FLOOR SPACE REQUIRED FOR ANY FIXTURE.

4.23.3 CLEAR FLOOR SPACE. THE ACCESSIBLE FIXTURES AND CONTROLS REQUIRED IN 4.23.4, 4.23.5, 4.23.6, 4.23.7, 4.23.8, AND 4.23.9 SHALL BE ON AN ACCESSIBLE ROUTE. AN UNOBSTRUCTED TURNING SPACE COMPLYING WITH 4.2.3 SHALL BE PROVIDED WITHIN AN ACCESSIBLE BATHROOM. THE CLEAR FLOOR SPACES AT FIXTURES AND CONTROLS, THE ACCESSIBLE ROUTE AND THE TURNING SPACE MAY OVERLAP.

EXCEPTION: IN BATHROOMS WITH ONLY ONE WATER CLOSET, ONE LAVATORY, AND ONE BATHTUB OR SHOWER A CLEAR FLOOR SPACE OF 30" BY 60" (760mm BY 1525mm) MAY BE USED IN LIEU OF THE UNOBSTRUCTED TURNING SPACE.

4.23.4 WATER CLOSETS. IF TOILET STALLS ARE PROVIDED, THEN AT LEAST ONE SHALL COMPLY WITH 4.17 ITS WATER CLOSET SHALL COMPLY WITH 4.16. IF WATER CLOSETS ARE NOT IN STALLS, THEN AT LEAST ONE SHALL COMPLY WITH 4.8.

4.23.5 URINALS. IF URINALS ARE PROVIDED, THEN AT LEAST ONE SHALL COMPLY WITH 4.18.

4.23.6 LAVATORIES AND MIRRORS. IF LAVATORIES AND MIRRORS ARE PROVIDED, THEN AT LEAST ONE OF EACH SHALL COMPLY WITH 4.19.

4.23.7 CONTROLS AND DISPENSERS. IF CONTROLS, DISPENSERS, RECEPTACLES, OR OTHER EQUIPMENT IS PROVIDED, THEN AT LEAST ONE OF EACH SHALL BE ON AN ACCESSIBLE ROUTE AND SHALL COMPLY WITH 4.27.

4.23.8 BATHTUB AND SHOWER ENCLOSURES. IF TUBS OR SHOWERS ARE PROVIDED, THEN AT LEAST ONE ACCESSIBLE TUB MAY COMPLY WITH 4.20 OR AT LEAST ONE ACCESSIBLE SHOWER MAY COMPLY WITH 4.21 SHALL BE PROVIDED.

4.23.9* MEDICINE CABINETS. IF MEDICINE CABINETS ARE PROVIDED, AT LEAST ONE SHALL BE LOCATED WITH A MEDICINE SHELF NO HIGHER THAN 44" (1120mm) ABOVE THE FLOOR SPACE. THE FLOOR SPACE SHALL COMPLY WITH 4.2.4.

4.24 SINKS.

4.24.1 GENERAL. SINKS REQUIRED TO BE ACCESSIBLE BY 4.1 SHALL COMPLY WITH 4.24. SINKS IN ROOMS OF ACCESSIBLE DWELLING UNITS SHALL COMPLY WITH 4.34.5.

4.24.2 HEIGHT. SINKS SHALL BE MOUNTED WITH THE COUNTER OR RIM NO HIGHER THAN 34" (865mm) ABOVE THE FINISHED FLOOR (SEE FIG. 31).

4.24.3 KNEE CLEARANCE. KNEE CLEARANCE THAT IS AT LEAST 27" (685mm) HIGH, 30" (760mm) WIDE, AND 19" (480mm) DEEP SHALL BE PROVIDED UNDER SINKS.

4.24.4 DEPTH. EACH SINK SHALL BE A MAXIMUM OF 6-1/2" (165mm) DEEP.

1220mm) COMPLYING WITH 4.2.4 SHALL BE PROVIDED IN FRONT OF A SINK TO ALLOW FORWARD APPROACH. NO CLEAR FLOOR SPACE SHALL BE ON AN ACCESSIBLE ROUTE AND SHALL EXTEND A MINIMUM OF 19" (480mm) UNDERNEATH THE SINK.

4.24.6 EXPOSED PIPES AND SURFACES. HOT WATER AND DRAIN PIPES EXPOSED UNDER SINKS SHALL BE INSULATED OR OTHERWISE COVERED. THERE SHALL BE NO SHARP OR ABRASIVE SURFACES UNDER SINKS.

4.24.7 FAUCETS. FAUCETS SHALL COMPLY WITH 4.27.4. LEVER-OPERATED, PUSH-TYPE, TOUCH-TYPE, OR ELECTRONICAL CONTROLLED MECHANISMS ARE ACCEPTABLE DESIGNS.

4.25 STORAGE.

4.25.1 GENERAL. FIXED STORAGE FACILITIES SUCH AS CABINETS, SHELVES, CLOSETS, AND DRAWERS REQUIRED TO BE ACCESSIBLE BY 4.1 SHALL COMPLY WITH 4.25.

4.25.2 CLEAR FLOOR SPACE. A CLEAR FLOOR SPACE AT LEAST 30" BY 48" (760mm BY 1220mm) COMPLYING WITH 4.2.4 THAT ALLOWS EITHER A FORWARD OR PARALLEL APPROACH BY A PERSON USING A WHEELCHAIR SHALL BE PROVIDED AT ACCESSIBLE STORAGE FACILITIES.

4.25.3 HEIGHT. ACCESSIBLE STORAGE SPACES SHALL BE WITHIN AT LEAST ONE OF THE PERSON SENSING SPACES IN 4.2.6 AND 4.2.6. CLOTHES RODS SHALL BE A MINIMUM OF 54" (1370mm) FROM THE FLOOR.

4.25.4 HARDWARE. HARDWARE FOR ACCESSIBLE STORAGE FACILITIES SHALL COMPLY WITH 4.27.4 TOUCH LATCHES AND U-SHAPED PULLS ARE ACCEPTABLE.

4.26 HANDRAILS, GRAB BARS, AND TUB AND SHOWER SEATS.

4.26.1 GENERAL. ALL HANDRAILS, GRAB BARS, AND TUB AND SHOWER SEATS REQUIRED TO BE ACCESSIBLE BY 4.1, 4.8, OR 4.9 SHALL COMPLY WITH 4.26.

4.26.2* SIZE AND SPACING OF GRAB BARS AND HANDRAILS. THE DIAMETER OR WIDTH OF THE GRIPPING SURFACE OF A HANDRAIL OR GRAB BAR SHALL BE 1-1/4" TO 1-1/2" (32mm TO 38mm) OR THE ALTERNATIVE SHAPE EQUIVALENT. IF HANDRAILS OR GRAB BARS ARE MOUNTED ADJACENT TO A WALL, THE SPACE BETWEEN THE WALL AND THE GRAB BAR SHALL BE 1-1/2" (38mm). HANDRAILS MAY BE LOCATED IN A RECESS IF THE RECESS IS A MINIMUM OF 3" (76mm) DEEP AND EXTENDS AT LEAST 18" (460mm) ABOVE THE TOP OF THE RAIL.

4.26.3 STRUCTURAL STRENGTH. THE STRUCTURAL STRENGTH OF GRAB BARS, TUB AND SHOWER SEATS, FASTENERS, AND MOUNTING DEVICES SHALL MEET THE FOLLOWING SPECIFICATIONS:

(1) BENDING STRESS IN A GRAB BAR OR SEAT BY THE APPLICATION OF 250LBF. (1112N) SHALL BE LESS THAN THE ALLOWABLE STRESS FOR THE MATERIAL OF THE GRAB BAR OR SEAT.

(2) SHEAR STRESS INDUCED IN A GRAB BAR OR SEAT BY THE APPLICATION OF 250LBF. (1112N) SHALL BE LESS THAN THE ALLOWABLE SHEAR STRESS FOR THE MATERIAL OF THE GRAB BAR OR SEAT. IF THE CONNECTION BETWEEN THE GRAB BAR OR SEAT AND ITS MOUNTING BRACKET OR OTHER SUPPORT IS CONSIDERED TO BE FULLY RESTRAINED FROM DIRECT AND TORSIONAL SHEAR STRESSES SHALL BE TERMED FOR THE COMBINED SHEAR STRESS WHICH SHALL NOT EXCEED THE ALLOWABLE SHEAR STRESS.

(3) SHEAR FORCE INDUCED IN A FASTENER OR MOUNTING DEVICE FROM THE APPLICATION OF 250LBF. (1112N) SHALL BE SO LESS THAN THE ALLOWABLE LATERAL LOAD OF EITHER THE FASTENER OR MOUNTING DEVICE OR THE SUPPORTING STRUCTURE WHICHEVER IS THE SMALLER ALLOWABLE LOAD.

(4) TENSILE FORCE INDUCED IN A FASTENER BY A DIRECT TENSION FORCE OF 250LBF. (1112N) PLUS THE MAXIMUM MOMENT FROM THE APPLICATION OF 250LBF. (1112N) SHALL BE LESS THAN THE ALLOWABLE WITHDRAWAL AND THE SUPPORTING STRUCTURE.

(5) GRAB BARS SHALL NOT ROTATE WITHIN THEIR FITTINGS.

4.26.4 ELIMINATING HAZARDS. A HANDRAIL OR GRAB BAR AND ANY WALL OR OTHER SURFACE ADJACENT TO IT SHALL BE FREE OF ANY SHARP OR ABRASIVE ELEMENTS. EDGES SHALL HAVE A MINIMUM RADIUS OF 1/8" (3mm).

4.27 CONTROLS AND OPERATING MECHANISMS.

4.27.1 GENERAL. CONTROLS AND OPERATING MECHANISMS REQUIRED TO BE ACCESSIBLE BY 4.1 SHALL COMPLY WITH 4.27.

4.27.2 CLEAR FLOOR SPACE. CLEAR FLOOR SPACE COMPLYING WITH 4.2.4 THAT ALLOWS A FORWARD OR PARALLEL APPROACH BY A PERSON USING A WHEELCHAIR SHALL BE PROVIDED AT CONTROLS, DISPENSERS, AND OTHER EQUIPMENT.

4.27.3* REACH RANGE. ALL REQUIRED CLEAR FLOOR SPACE AT ALL CONTROLS, DISPENSERS, DISPOSALS, AND OTHER EQUIPMENT SHALL BE LOCATED WITHIN AT LEAST ONE OF THE REACH RANGES SPECIFIED IN 4.2.5 AND 4.2.6. CLEAR FLOOR SPACE MAY BE PLACED ADJACENT TO, OR WITHIN A MAXIMUM OF 24" (610mm) OF, THE ELEMENT BEING ACCESSED. AT LEAST ONE REACH RANGE SHALL BE WITHIN THE PERSON'S REACH RANGE WHEN SEATED.

4.27.4 OPERATION. CONTROLS AND OPERATING MECHANISMS SHALL BE OPERABLE WITH ONE HAND AND SHALL NOT REQUIRE TIGHT PINCHING OR TWISTING OF THE WRIST TO OPERATE. THE FORCE REQUIRED TO ACTIVATE CONTROLS SHALL BE NO GREATER THAN 5 LBF (22.2N).

4.28 ALARMS.

4.28.1 GENERAL. ALARM SYSTEMS REQUIRED TO BE ACCESSIBLE BY 4.1 SHALL COMPLY WITH 4.28.

4.28.2 AUDIBLE ALARMS. IF PROVIDED, AUDIBLE ALARMS SHALL EMIT A SIGNAL THAT PERSONS WITH HEARING DIFFICULTIES CAN HEAR. A SIGNAL OF 520Hz WITH A MINIMUM SOUND PRESSURE OF 15DB ABOVE AMBIENT NOISE LEVEL IS ACCEPTABLE. THE SOUND PRESSURE SHALL BE AT LEAST 75DB AT THE HEAD OF A SLEEPER. THE SOUND PRESSURE SHALL BE NO GREATER THAN 120DB.

4.28.3 VISUAL ALARMS. IF PROVIDED, ELECTRICALLY POWERED VISUALLY ILLUMINATED DEVICES SHALL BE ADDITIONALLY PROVIDED TO ALERT PERSONS WITH HEARING DIFFICULTIES. THE LIGHT SHALL EITHER FLASH OR BE PULSATING. THE LIGHT SHALL BE ARRANGED TO MINIMIZE THE POSSIBILITY OF EPILEPTIC SEIZURES.

EXCEPTION:
(1) VISUAL ALARM DEVICES THAT ARE MOUNTED ADJACENT TO EMERGENCY EXIT SIGNS MAY BE USED IN LIEU OF FLASHING EXIT SIGNS.

(2) SPECIALIZED SYSTEMS UTILIZING ADVANCED TECHNOLOGY MAY BE SUBSTITUTED FOR THE VISUAL ALARM DEVICES PROVIDED EQUIVALENT PROTECTION IS AFFORDED HANDICAPPED PERSONS ON THE FLOOR.

4.28.4 AUDIBLE ALARMS. ACCESSIBLE SLEEPING ACCOMMODATIONS SHALL HAVE A VISUAL ALARM CONNECTED TO THE BUILDING ALARM SYSTEM. ALARM SIGNALS SHALL BE ACCOMPANIED BY A VISUAL SIGNAL OUTSIDE OR INSIDE THE BUILDING. A VISUAL ALARM SIGNAL ASSOCIATED WITH AN ALARM SIGNAL SHALL INDICATE THE EXACT LOCATION OF THE EMERGENCY. INSTRUCTIONS FOR USE OF THE AUDIBLE ALARM OR CONNECTION SHALL BE PROVIDED.

4.29 TACTILE WARNINGS.

4.29.1 GENERAL. TACTILE WARNINGS REQUIRED TO BE ACCESSIBLE BY 4.1 SHALL COMPLY WITH 4.29.

4.29.2* TACTILE WARNINGS ON WALKING SURFACES. (RESERVED).

4.29.3* TACTILE WARNINGS ON DOORS TO HAZARDOUS AREAS. (RESERVED)

4.29.4 TACTILE WARNINGS AT STAIRS. (RESERVED)

4.29.5* TACTILE WARNINGS AT HAZARDOUS VEHICULAR AREAS. (RESERVED)

4.29.6* TACTILE WARNINGS AT REFLECTING POOLS. (RESERVED)

4.29.7 DETECTABLE WARNINGS. DETECTABLE WARNINGS SHALL BE PROVIDED TO ALERT PERSONS WITH VISUAL IMPAIRMENTS OF THE APPROACH TO A HAZARD OF EITHER 24" AND 60" (1525mm) WIDE AND SHALL CONSIST OF RAISED DOTS.

4.30 SIGNAGE.

4.30.1 GENERAL. SIGNAGE REQUIRED TO BE ACCESSIBLE BY 4.1 SHALL COMPLY WITH 4.30.

4.30.2 VISUALLY DISTINCT. LETTERS AND NUMBERS ON SIGNS SHALL HAVE A WIDTH TO-HEIGHT RATIO BETWEEN 3:5 AND 1:1 AND A STROKE WIDTH TO-HEIGHT RATIO BETWEEN 1:5 AND 1:10.

4.30.3* COLOR CONTRAST. CHARACTERS AND SYMBOLS SHALL CONTRAST WITH THEIR BACKGROUND—EITHER LIGHT CHARACTERS ON A DARK BACKGROUND OR DARK CHARACTERS ON A LIGHT BACKGROUND.

4.30.4* RAISED AND BRAILLE CHARACTERS OR SYMBOLS. LETTERS AND NUMBERS ON SIGNS SHALL BE RAISED. SHALL BE AT LEAST 1/32" (1mm) RAISED AND SHALL BE AT LEAST 5/8" (15mm) HIGH BUT NOT HIGHER THAN 2" (50mm). SYMBOLS OR PICTOGRAMS ON SIGNS SHALL BE RAISED OR INCREASE 1/32" (1mm).

4.30.5 SERVICE OF ACCESSIBILITY. ACCESSIBLE FACILITIES REQUIRED TO BE MARKED BY 4.1 SHALL USE THE INTERNATIONAL SYMBOL OF ACCESSIBILITY. THE SYMBOL SHALL BE DISPLAYED AS SHOWN IN FIG. 43.

4.30.6 RAISED LETTERS AND DOTS. RAISED LETTERS SHALL BE LOCATED ADJACENT TO THE DOOR ON THE LATCH SIDE AND SHALL BE LOCATED AT A HEIGHT OF BETWEEN 54" AND 60" (137mm AND 1470mm) ABOVE THE FINISHED FLOOR.

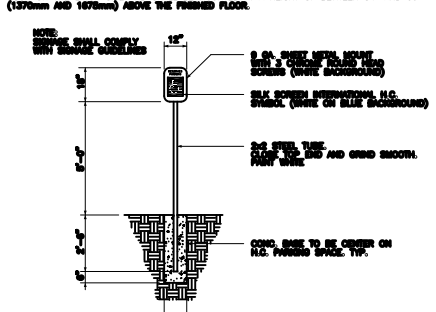

EXTERIOR HANDICAP SIGN

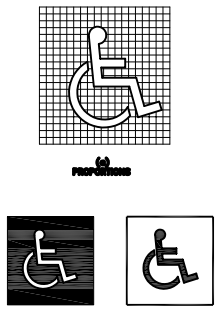

FIG. 43
INTERNATIONAL SYMBOL OF ACCESSIBILITY

PUBLIC TELEPHONES REQUIRED TO BE ACCESSIBLE BY 4.1 SHALL COMPLY WITH 4.31.

4.31 TELEPHONES.

4.31.1 GENERAL.

4.31.2 CLEAR FLOOR OR GROUND SPACE. A CLEAR FLOOR OR GROUND SPACE AT LEAST 30" BY 48" (760mm BY 1220mm) THAT ALLOWS EITHER A FORWARD OR PARALLEL APPROACH BY A PERSON USING A WHEELCHAIR SHALL BE PROVIDED AT TELEPHONES. THE CLEAR FLOOR OR GROUND SPACE SHALL COMPLY WITH 4.2.4. BOOTHS AND PENDED SENTS SHALL NOT IMPEDE APPROACHES TO TELEPHONES BY PEOPLE USING WHEELCHAIRS.

4.31.3 MOUNTING HEIGHT. THE HIGHEST REACHABLE PART OF THE TELEPHONE SHALL BE WITHIN THE REACH RANGES SPECIFIED IN 4.2.5 OR 4.2.6.

4.31.4 PROTRUDING OBJECTS. TELEPHONES SHALL COMPLY WITH 4.4.

4.31.5* PROVISIONS FOR HEARING IMPAIRED PERSONS. TELEPHONES SHALL BE EQUIPPED WITH A SOUND AMPLIFICATION DEVICE. THE SOUND AMPLIFICATION DEVICE SHALL BE CAPABLE OF THE REQUIRED GAIN. VOLUME CONTROL SHALL BE PROVIDED IN ADDITION TO 4.1.3.

4.31.6 CONTROLS. TELEPHONES SHALL HAVE PUSHBUTTON CONTROLS WHERE SERVICE FOR SUCH EQUIPMENT IS AVAILABLE.

4.31.7 TELEPHONE BOOTH. TELEPHONE BOOTHS, IF PROVIDED, SHALL BE LOCATED IN A POSITION THAT COMPLIES WITH THE REACH RANGES SPECIFIED IN 4.2.5 AND 4.2.6.

4.31.8 CORD LENGTH. THE CORD FROM THE TELEPHONE TO THE HANDSET SHALL BE AT LEAST 29".

4.32 SEATING, TABLES, AND WORK SURFACES.

4.32.1 MINIMUM NUMBER. FIXED OR BUILT IN SEATING, TABLES, OR WORK SURFACES REQUIRED TO BE ACCESSIBLE BY 4.1 SHALL COMPLY WITH 4.32.

4.32.2 SEATING. IF SEATING SPACES FOR PEOPLE IN WHEELCHAIRS ARE PROVIDED AT TABLES, COUNTERS, OR WORK SURFACES, CLEAR FLOOR SPACE COMPLYING WITH 4.2.4 SHALL BE PROVIDED. SUCH CLEAR FLOOR SPACE SHALL NOT OVERLAP THIRD SPACE BY MORE THAN 19" (480mm).

4.32.3 KNEE CLEARANCE. IF SEATING FOR PEOPLE IN WHEELCHAIRS IS PROVIDED AT TABLES, COUNTERS, AND WORK SURFACES, KNEE SPACE AT LEAST 27" (685mm) HIGH 30" (760mm) WIDE AND 19" (480mm) DEEP SHALL BE PROVIDED.

4.32.4* HEIGHT OF WORK SURFACES. THE TOPS OF TABLES AND WORK SURFACES SHALL BE FROM 28" TO 34" (710mm TO 865mm) FROM THE FLOOR OR GROUND.

4.33 ASSEMBLY AREAS.

4.33.1 MINIMUM NUMBER. ASSEMBLY AND ASSOCIATED AREAS REQUIRED TO BE ACCESSIBLE BY 4.1 SHALL COMPLY WITH 4.33.

4.33.2* SIZE OF WHEELCHAIR LOCATIONS. EACH WHEELCHAIR LOCATION SHALL PROVIDE MINIMUM CLEAR GROUND OR FLOOR SPACES AS SHOWN IN FIG. 46.

4.33.3* PLACEMENT OF WHEELCHAIR LOCATIONS. WHEELCHAIR AREAS SHALL BE AN INTEGRAL PART OF ANY FIXED SEATING PLAN AND SHALL BE DISPERSED THROUGHOUT THE SEATING AREA. THEY SHALL ADJOIN AN ACCESSIBLE ROUTE THAT ALSO SERVES AS A PLACE OF EGRESS IN CASE OF EMERGENCY AND SHALL BE LOCATED TO PROVIDE LINES OF SIGHT TO THE STAGE OR PLATFORM SIMILAR TO THE MAJORITY OF SEATS.

EXCEPTION: ACCESSIBLE SEATING POSITIONS MAY BE CLUSTERED FOR SERVICES, BELIEVING, AND OTHER SUCH WORK SHOP LIKE THE SEATING PLANS OF SEVERAL ADJACENT, ACCESSIBLE SEATING POSITIONS MAY BE LOCATED ON THREE SIDES OF THE ACCESSIBLE SEATING.

4.33.4 SURFACE. THE GROUND OR FLOOR AT WHEELCHAIR LOCATIONS SHALL BE LEVEL AND COMPLY WITH 4.5.

4.33.5 ACCESS TO PERFORMING AREAS. AN ACCESSIBLE ROUTE SHALL CONNECT WHEELCHAIR SEATING LOCATIONS WITH PERFORMING AREAS, INCLUDING STAGES, ARENA FLOORS, DRESSING ROOMS, LOCKER ROOMS, AND OTHER SPACES USED BY PERFORMERS.

4.33.6* PLACEMENT OF AUDITORY SYSTEMS. IF THE AUDITORY SYSTEM PROVIDED IS A FIXED SYSTEM, AT LEAST ONE SEAT IN EACH SECTION SHALL BE WITHIN THE ONE (1)[illegible] WITHIN DEVICE RANGE OR PLACED AREA AND SHALL HAVE A COMPLETE VIEW OF THE STAGE OR PLACED AREA.

4.33.7* TYPES OF LISTENING SYSTEMS. AUDIO LOOPS AND RADIO FREQUENCY SYSTEMS ARE TWO ACCEPTABLE TYPES OF LISTENING SYSTEMS.

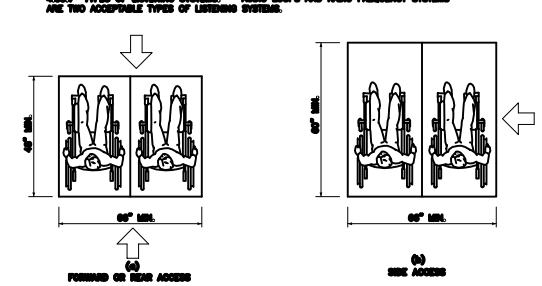

FIG. 46
SPACE REQUIREMENTS FOR WHEELCHAIR SEATING SPACES IN SERIES
N.T.S.

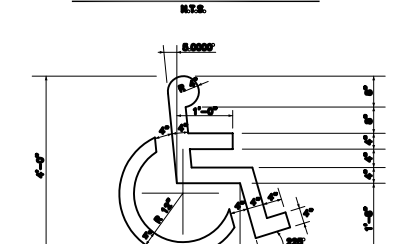

HANDICAP SIGN DETAIL
N.T.S.

DAMMON ENGINEERING, INC.
EMMETT DAMMON

ARCHITECT
ROBERT WILTS