DOOR & HARDWARE SCHEDULE

MARK	SIZE	DOOR TYPE	FRAME	HDWR. NO.	STC	REMARKS
EXTERIOR DOORS						
1	1-3/4x3/0x6/8	SOLID WD. PANEL DOOR W/SIDE LITES	CUSTOM WOOD FRAME	1	NA	
2	1-3/4x3/0x6/8	FLUSH GALV. HOL. MET. STEEL INSUL.	GALV. PTD. HOL. MET.	1	NA	GALVANIZING TO BE G90
INTERIOR DOORS						
3	1-3/4x3/0x6/8	FLUSH SOLID CORE WD.	PTD. HOL. MET.	2	NA	

DOOR HARDWARE SCHEDULE:
1. PROVIDE NEW HARDWARE, KEYED HANDLE, AUTO CLOSER, WEATHER STRIPPING, BALL BEARING HIGES.
2. AUTO CLOSER, PUSH/PULL DOOR STOP, BALL BEARING HINGES.

WINDOW SCHEDULE

MARK	SIZE (WxH)	TYPE	REMARKS
A	5/0x7/0	CUSTOM MADE TO FIT EXISTING OPENING	FIELD VERIFY
B	4/0x7/0	CUSTOM MADE TO FIT EXISTING OPENING	FIELD VERIFY

GENERAL NOTES

1. INSULATION AND INSULATION ASSEMBLIES SHALL MEET THE REQUIREMENTS OF SECTION 719.
   A. CONCEALED INSULATION SHALL HAVE A FLAME SPREAD OF 0-25 AND SMOKE DEVELOPED INDEX OF 0-450. EXCEPT THAT IN COMBUSTIBLE (WOOD FRAME) CONSTRUCTION.
   B. FACING SHALL COMPLY WITH IBC 2009.
2. PROVIDE 5'x5' LANDINGS, LEVEL WITH FINISHED FLOOR, OUTSIDE EXTERIOR DOORS. THRESHOLDS SHALL BE NOT MORE THAN 1/2" IN HEIGHT AND SHALL BE BEVELED IF MORE THAN 1/4". MAX SLOPE 1:48
3. CONTRACTOR TO VERIFY ALL SITE CONDITIONS, BUILDING LOCATIONS, AND DIMENSIONS PRIOR TO CONSTRUCTION.
4. MATERIALS SHALL BE NEW AND U.L. LISTED.
5. NO WORK SHALL BE CONCEALED UNTIL APPROVED BY LOCAL INSPECTORS.
6. CONSTRUCTION SHALL COMPLY WITH ALL PARISH, STATE, AND LOCAL CODES.
7. CONTRACTOR TO GUARANTEE WORK FOR ONE YEAR.
8. CONTRACTOR SHALL FURNISH WATER AND POWER FROM EXISTING SOURCES.
9. EXTERIOR CAULKING SHALL BE THIOKAL CAULK.
10. PAINT GRADE TO SHALL BE SHERWIN WILLIAMS OR EQUIVALENT. ALL WORK TO RECEIVE 3 COATS. COLOR SELECTION BY OWNER.
11. PROVIDE CLEANUP ON A REGULAR BASIS. NO TRASH STORED IN BUILDING.
12. ALL BATT INSULATION SHALL HAVE A CLASS "A" (0-25) FLAME SPREAD IN COMPLIANCE WITH APPLICABLE CODE.
13. USE 6" STUDS, OR 4" STAGGERED STUDS AT ALL PLUMBING WALLS.
14. PROVIDE GALVANIZED METAL PAN WITH DRAIN AT WATER HEATER LOCATION.
15. ALL CORNERS SHALL BE PROPERLY BRACED FOR WIND LOADS. A 48" SHEATHING SHALL BE PROVIDED EVERY 20 FEET OF WALL LENGTH.
16. INTERIOR LOCKS ON DOORS IN MEANS OF EGRESS SHALL NOT REQUIRE THE USE OF A KEY, SPECIAL KNOWLEDGE, OR SPECIAL DEVICE TO OPEN IN THE DIRECTION OF EGRESS. ALL DOORS SHALL HAVE LEVER TYPE HANDLES.
17. INTERIOR WALLS AND CEILINGS SHALL HAVE A FLAME SPREAD OF 0-200 AND A SMOKE DEVELOPMENT RATING OF 0-450.
18. ALL WORK SHALL COMPLY WITH THE LATEST EDITION OF ALL LOCAL, STATE, AND NATIONAL CODES COVERING THE TYPE OF WORK BEING PERFORMED.
19. PROVIDE PORTABLE FIRE EXTINGUISHERS IN ACCORDANCE WITH NFPA 101. SEE APPENDIX "E" OF NFPA 101 FOR DISTRIBUTION OF EXTINGUISHERS.
20. ALL FIRE WALLS SHALL EXTEND TIGHT TO ROOF DECK AND BE SEALED WITH AN APPROVED FIRE CAULK.
21. ALL ELECTRICAL, MECHANICAL, AND PLUMBING MATERIALS PENETRATING FIRE WALLS SHALL BE FIRE CAULKED. (PENETRATIONS THROUGH RATED CONSTRUCTION SHALL BE SEALED WITH A MATERIAL CAPABLE OF PREVENTING THE PASSAGE OF FLAMES AND HOT GASES WHEN TESTED IN ACCORDANCE WITH ASTM-E814.)
22. SERVICE COUNTER SHALL HAVE A HCP ACCESSIBLE WRITING SURFACE, MAX. 36" FROM F.F. (ADAAG MANUAL 1998, PG 135)
23. ALL FINISHES / COLORS TO BE SELECTED BY OWNER.

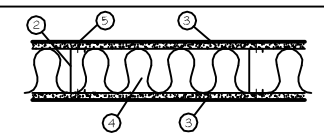

1 HOUR RATED WALL (U465)

UL465
1. FLOOR AND CEILING RUNNER: (NOT SHOWN)25 MSG MIN. GALV. STEEL 1" HIGH, RETURN LEGS 3-5/8" (MIN), ATTACHED TO FLOOR AND CEILING WITH FASTENERS AT 24" O.C.
2. STEEL STUDS: 3-5/8" WIDE (MIN.), 1-1/4" LEGS, 3/8" RETURN, FORMED OF 25 MSG GALV. STEEL, MAX. SPACING 24" O.C.
3. GYPSUM WALLBOARD: 5/8" THICK, 4' WIDE, ATTACHED TO STEEL STUDS AND FLOOR AND CEILING TRACK WITH 1" LONG TYPE "S" SELF-TAPPING STEEL SCREWS SPACED 8" O.C. ALONG EDGES OF BOARD AND 12" O.C. IN THE FIELD OF THE BOARD. JOINTS ORIENTED VERT. AND STAGGERED ON OPPOSITE SIDES OF THE ASSEMBLY.
4. BATTS AND BLANKETS:
MINERAL WOOL INSULATION, PARTIALLY OR COMPLETELY FILLING STUD CAVITY.
5. JOINT AND TAPE COMPOUND: VINYL, DRY OR PREMIXED JOINT COMPOUND, APPLIED IN TWO COATS TO JOINTS AND SCREW HEADS; PAPER TAPE, 2" WIDE, EMBEDDED IN FIRST LAYER OF COMPOUND OVER ALL JOINTS. AS AN ALTERNATE, NOMINAL 3/32" THICK GYPSUM VENEER PLASTER MAY BE APPLIED TO THE ENTIRE SURFACE OF CLASSIFIED VENEER BASEBOARD. JOINT REINFORCED.

LEGEND:

SAT	SUSPENDED ACOUSTICAL TILE
CT	CERAMIC TILE
CPTT	CARPETED TILE
RB	RUBBER BASE 4" HIGH
GYP	5/8" SHEET ROCK

FINISH SCHEDULE

ROOM NUMBER	ROOM NAME	WALLS	EXTEND WALL TO ROOF DECK CARD NAL D REC" ON	FLOOR	WALL BASE	WAINSCOT	CEILING	CLG HGT	NOTE
100	FUTURE TENANT	N/A	N/A	N/A	NA	NA	NA	OPEN	
101	FUTURE TENANT	N/A	N/A	N/A	NA	NA	NA	OPEN	
102	WOMEN'S ROOM	5/8" GYP. BD. PTD.	N/A	CT	CT	4' MIN. CT	5/8" GYP. BD. PTD.	9'	2X12 C.J. @ 16" O.C. W/ 3/4" PLYWOOD DECKING
103	MEN'S ROOM	5/8" GYP. BD. PTD.	N/A	CT	CT	4' MIN. CT	5/8" GYP. BD. PTD.	9'	2X12 C.J. @ 16" O.C. W/ 3/4" PLYWOOD DECKING

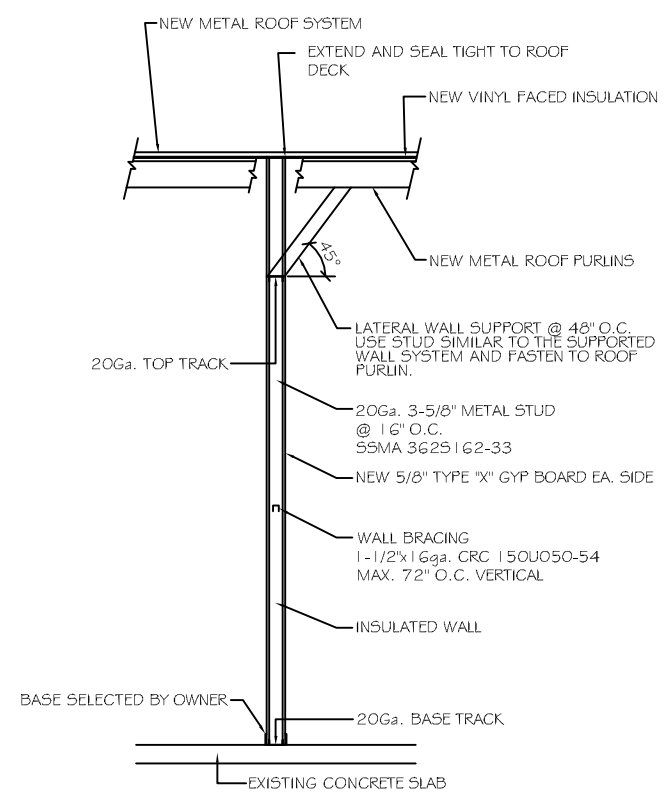

INTERIOR RATED WALL DETAIL

SCALE: 1/2"=1'-0"

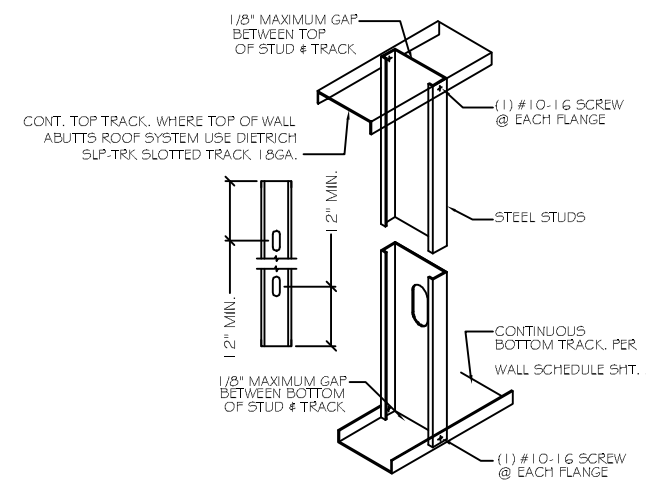

TRACK CONNECTION DETAIL

SCALE: N.T.S.

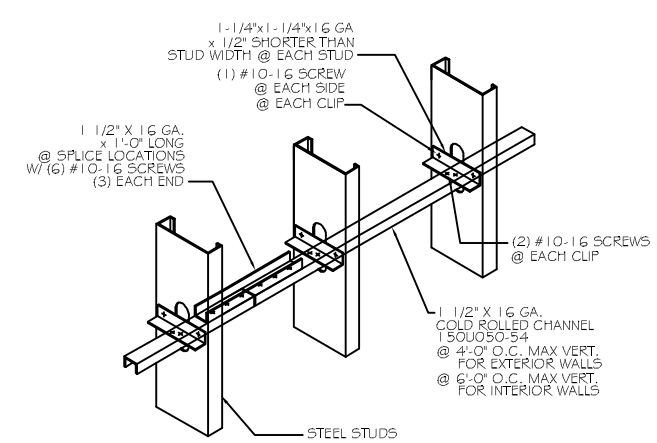

HORZ. BRACING DETAIL

SCALE: N.T.S.

DAMMON ENGINEERING, INC.
Architects & Engineers
dammoneng@bellsouth.net
PHONE: 985-649-5932
FAX: 985-649-5950
CHIEF ENGINEER: EMMETT DAMMON, P.E.
CHIEF ARCHITECT: ROBERT WILTSE
554 OLD SPANISH TRAIL
SLIDELL, LA 70458

OLDE TOWN SLIDELL
FIRE DAMAGE REHABILITATION
227 & 229 QUEEN STREET
SLIDELL, LA
70458

JOB No:	2146	DATE: 07-26-2012
DRAWN BY:	BSN	CHECKED BY: BSN

#	DESCRIPTION	DATE
REVISIONS		

SCHEDULE & DETAILS

SHEET No: 7 OF 9

A-4