NOTE: EMBED ALL ANCHOR BOLTS 4" DEEP INTO EXISTING CONCRETE WITH EPOXY.

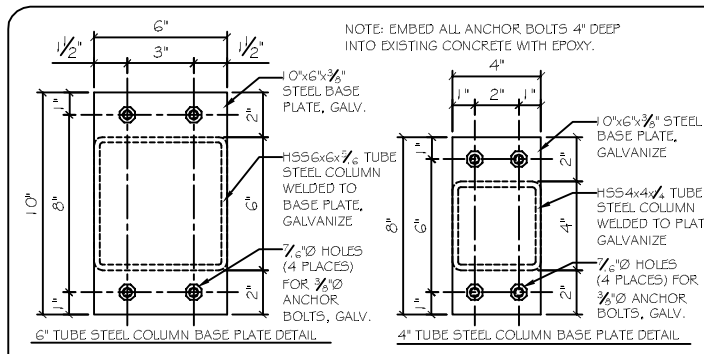

COLUMN BASE PLATES DETAIL

SCALE: 3" = 1'-0"

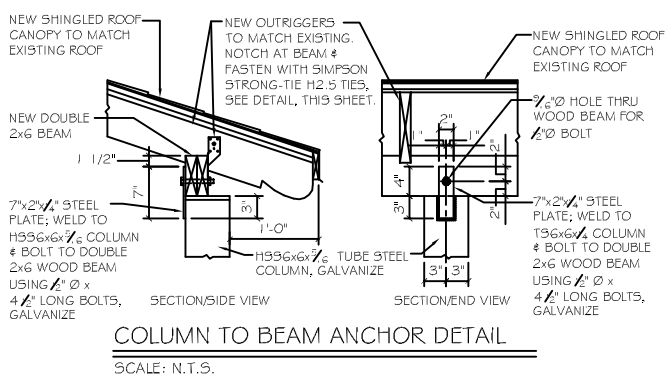

COLUMN TO BEAM ANCHOR DETAIL

SCALE: N.T.S.

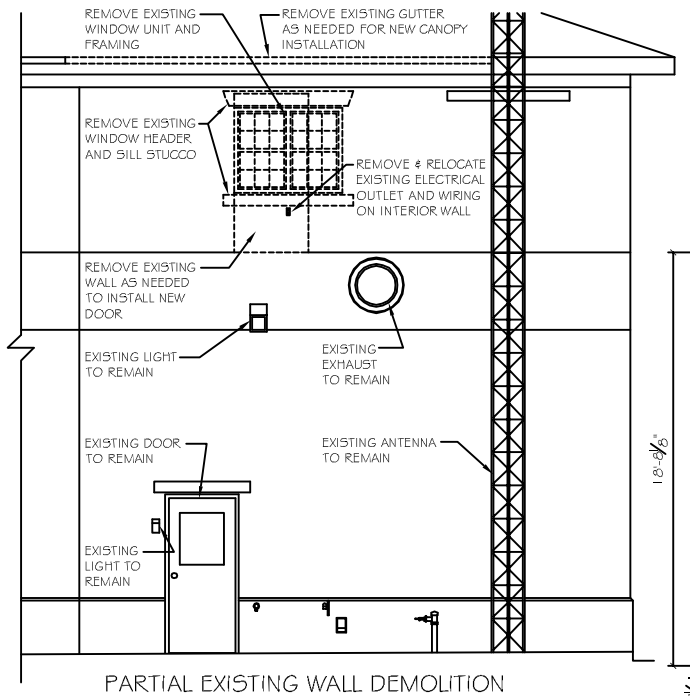

PARTIAL EXISTING WALL DEMOLITION

SCALE: 1/4"=1'-0"

NOTE: FIELD VERIFY ALL DIMENSIONS PRIOR TO CONSTRUCTION.

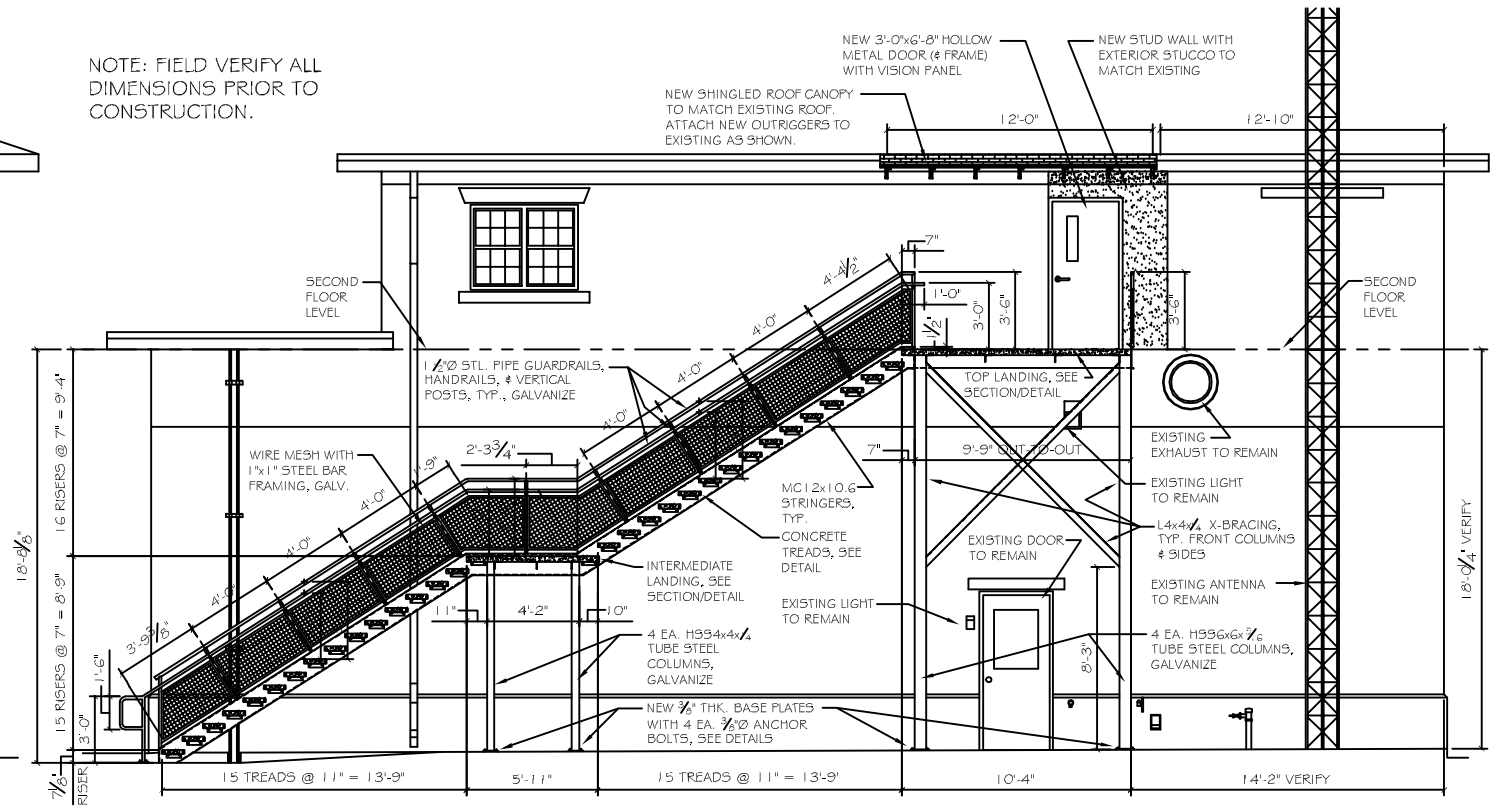

NEW STAIRS - SECTION

SCALE: 1/4"=1'-0"

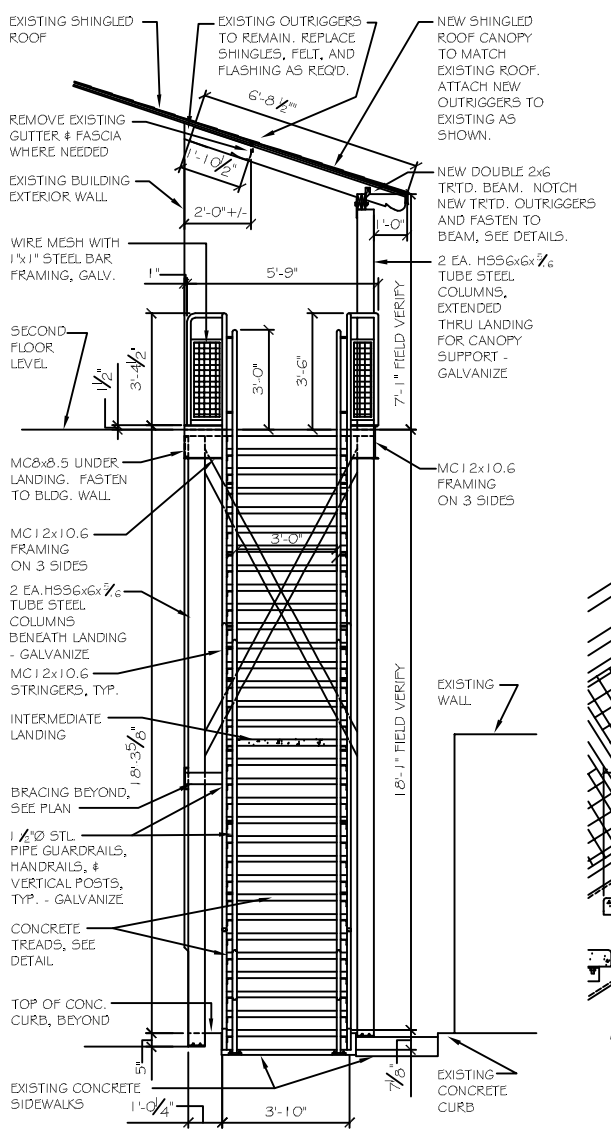

NEW STAIRS ELEVATION

SCALE: 3/8"=1'-0"

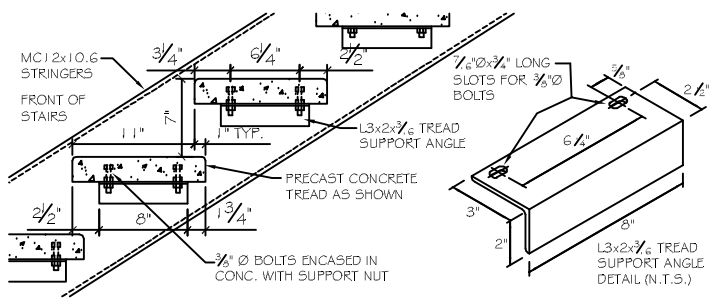

TYPICAL TREAD DETAIL

SCALE: 1 - 1/2"=1'-0"

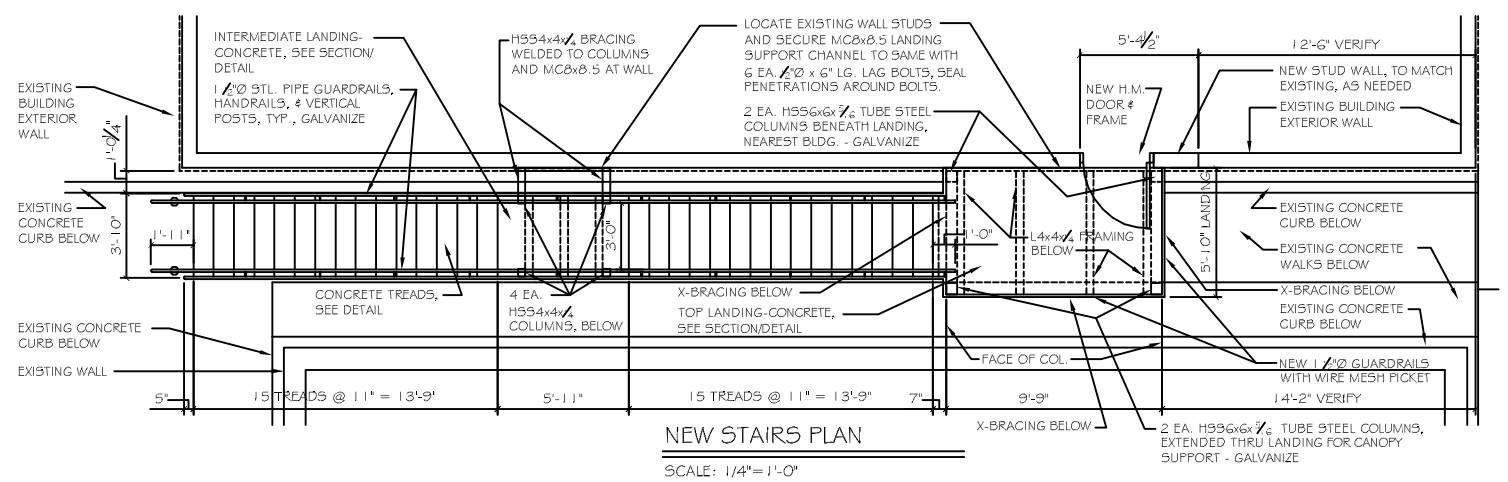

NEW STAIRS PLAN

SCALE: 1/4"=1'-0"

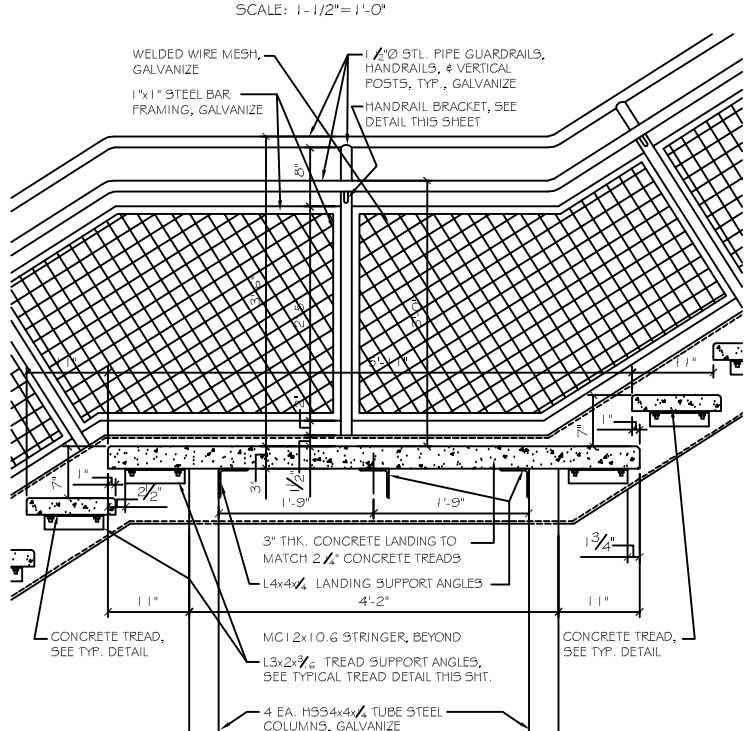

SECTION THRU INTERMEDIATE LANDING

SCALE: 1"=1'-0"

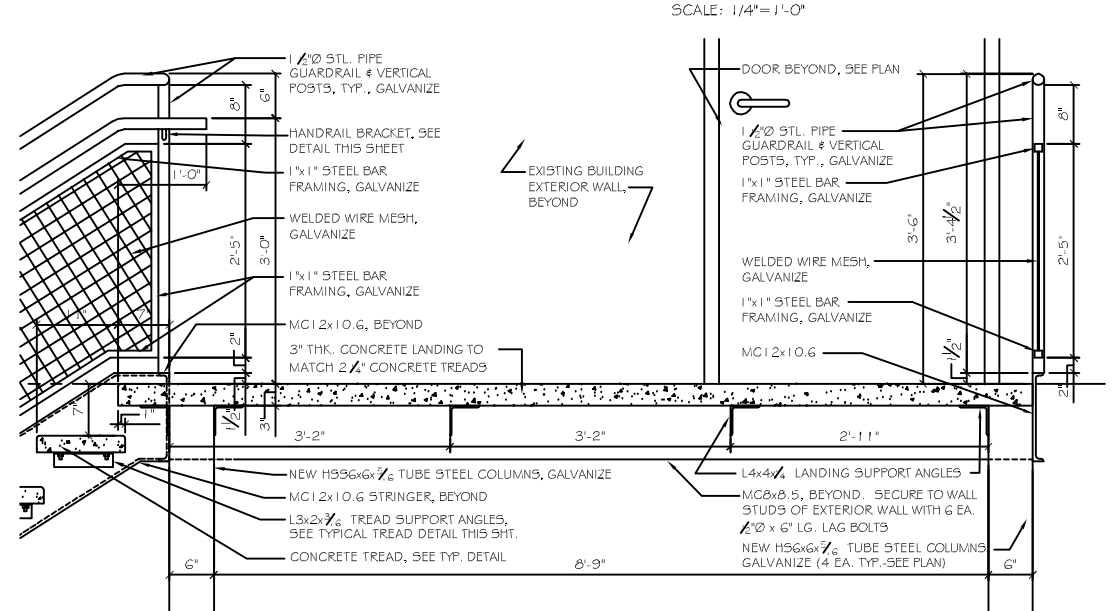

SECTION THRU TOP LANDING

SCALE: 1"=1'-0"

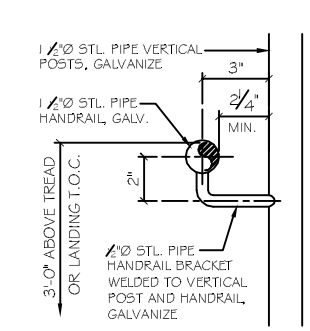

TYPICAL HANDRAIL DETAIL

SCALE: 3"=1'-0"

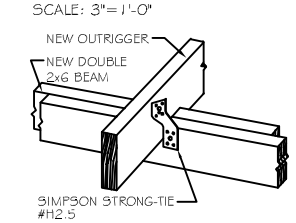

OUTRIGGER TO BEAM ANCHOR DETAIL

SCALE: N.T.S.

DAMMON ENGINEERING, INC.
Architects & Engineers
dammon@cox-internet.com
dammon@bellsouth.net
PHONE: 985-649-5832
FAX: 985-641-9950
CHIEF ENGINEER: SUMMIT DAMMON, P.E.
CHIEF ARCHITECT: KEVIN KINCHEN
554 OLD SPANISH TRAIL
SLIDELL, LA 70458

FIRE STATION #14
NEW STAIRS ADDITION

322 FOUGS-AKEN STREET
SLIDELL, LA 70458

JOB No:	2159	DATE: 01-15-2013
DRAWN BY:	JTL	CHECKED BY:

#	DESCRIPTION	DATE
REVISIONS		

WALL DEMO; STAIRS PLAN, SECTION, & DETAILS

SHEET No: A1 OF