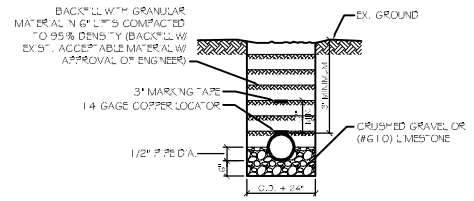

PIPE BEDDING DETAIL FOR SEWER AND WATER

SCALE: N.T.S.

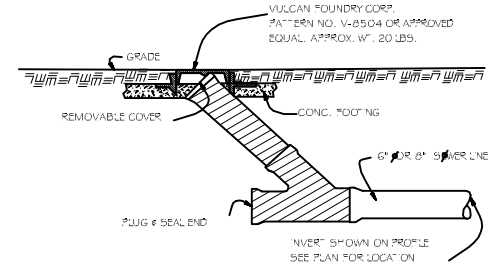

CLEANOUT DETAIL

N.T.S.

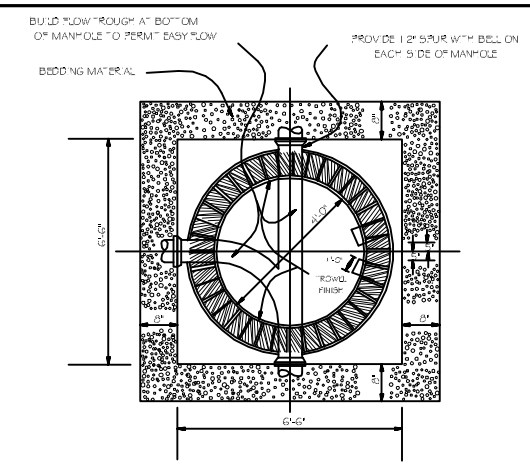

TYPICAL SEWER MANHOLE BOTTOM

N.T.S.

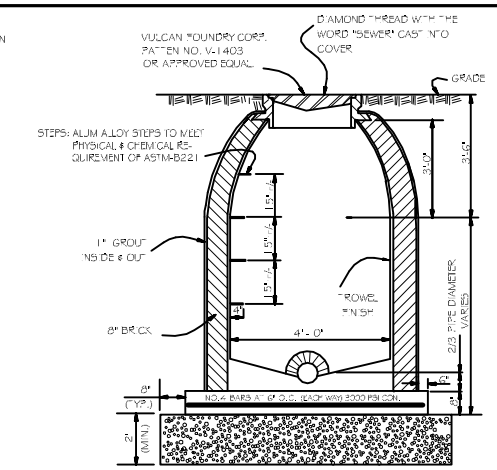

TYPICAL STANDARD SEWER MANHOLE

N.T.S.

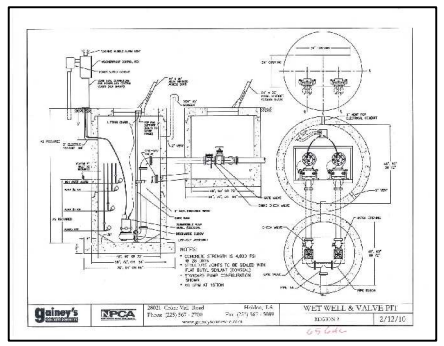

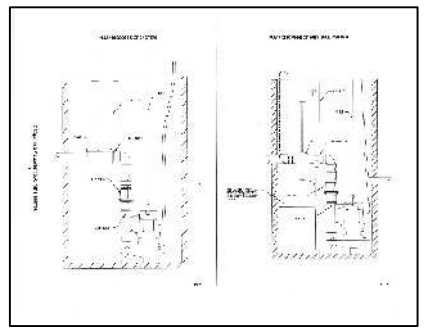

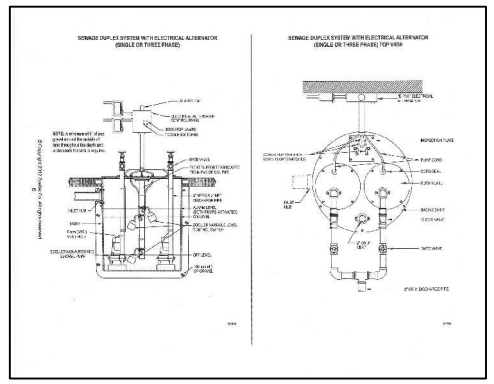

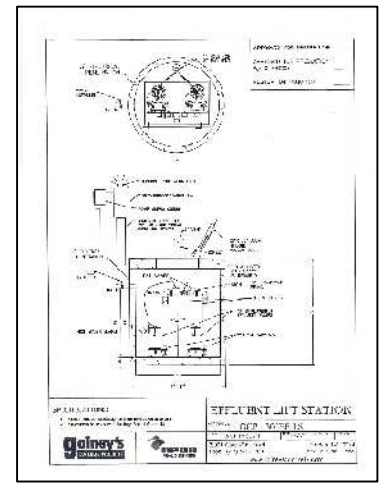

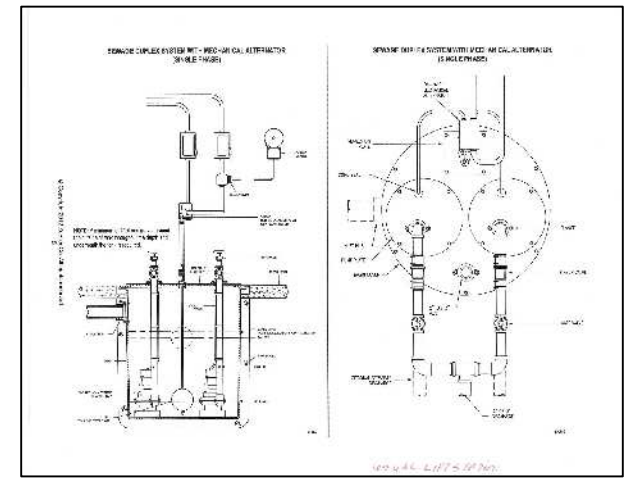

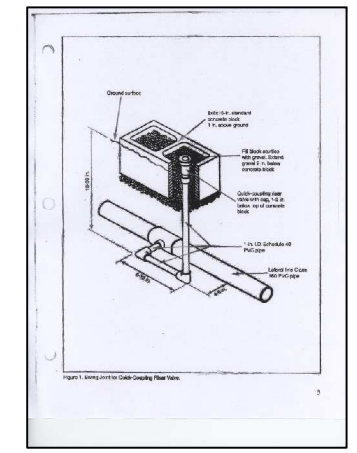

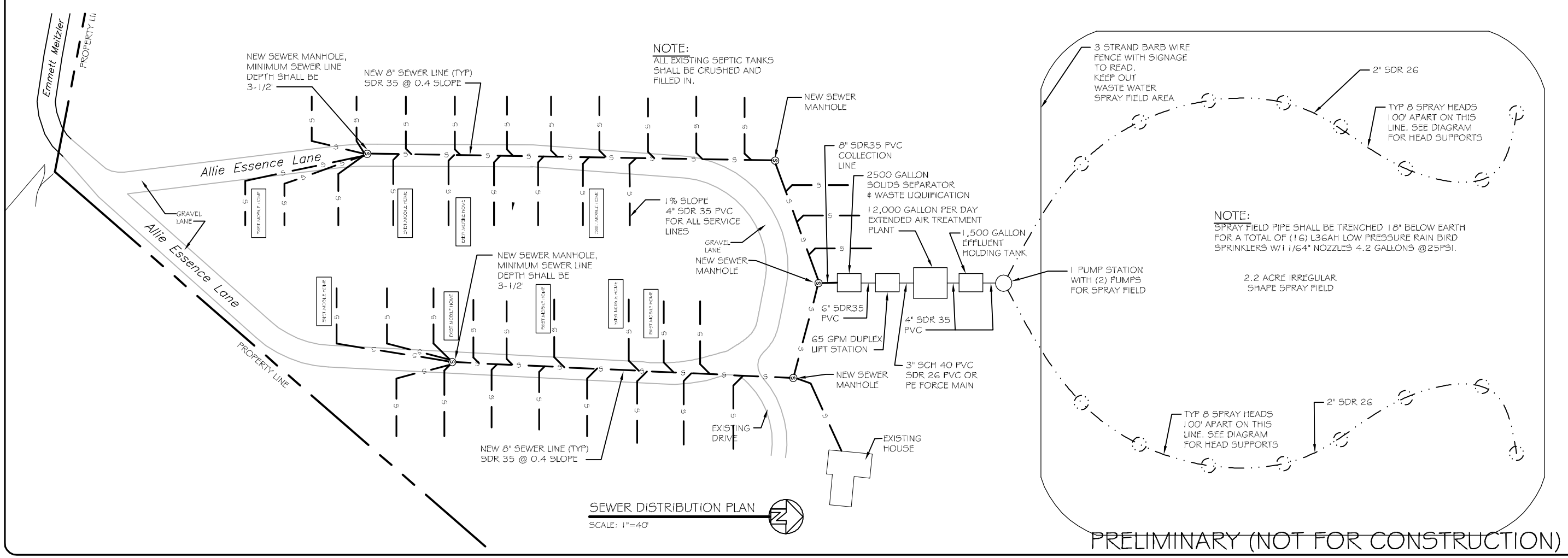

SEWER DISTRIBUTION PLAN

SCALE: 1"=40'

PRELIMINARY (NOT FOR CONSTRUCTION)

DAMMON ENGINEERING, INC.

CHIEF ENGINEER: EVERETT DAMMON, P.E.
4 COLONIAL TRAIL
SUFFOLK, LA 70458

dammoneng@aol.com
damonengineering.com
PHONE: 985-649-5032
FAX: 985-641-5950

DREAMLAND MOBILE HOME PARK SYSTEM UPGRADE & REHABILITATION

ALLIE ESSENCE LANE
NICHOLSON, MISSISSIPPI

JOB No:	2182	DATE: 08-27-2013
DRAWN BY:	JTL	CHECKED BY: BM

#	DESCRIPTION	DATE
1		

REVISIONS

SEWER DISTRIBUTION PLAN

SHEET No: 2 OF 3

C-2