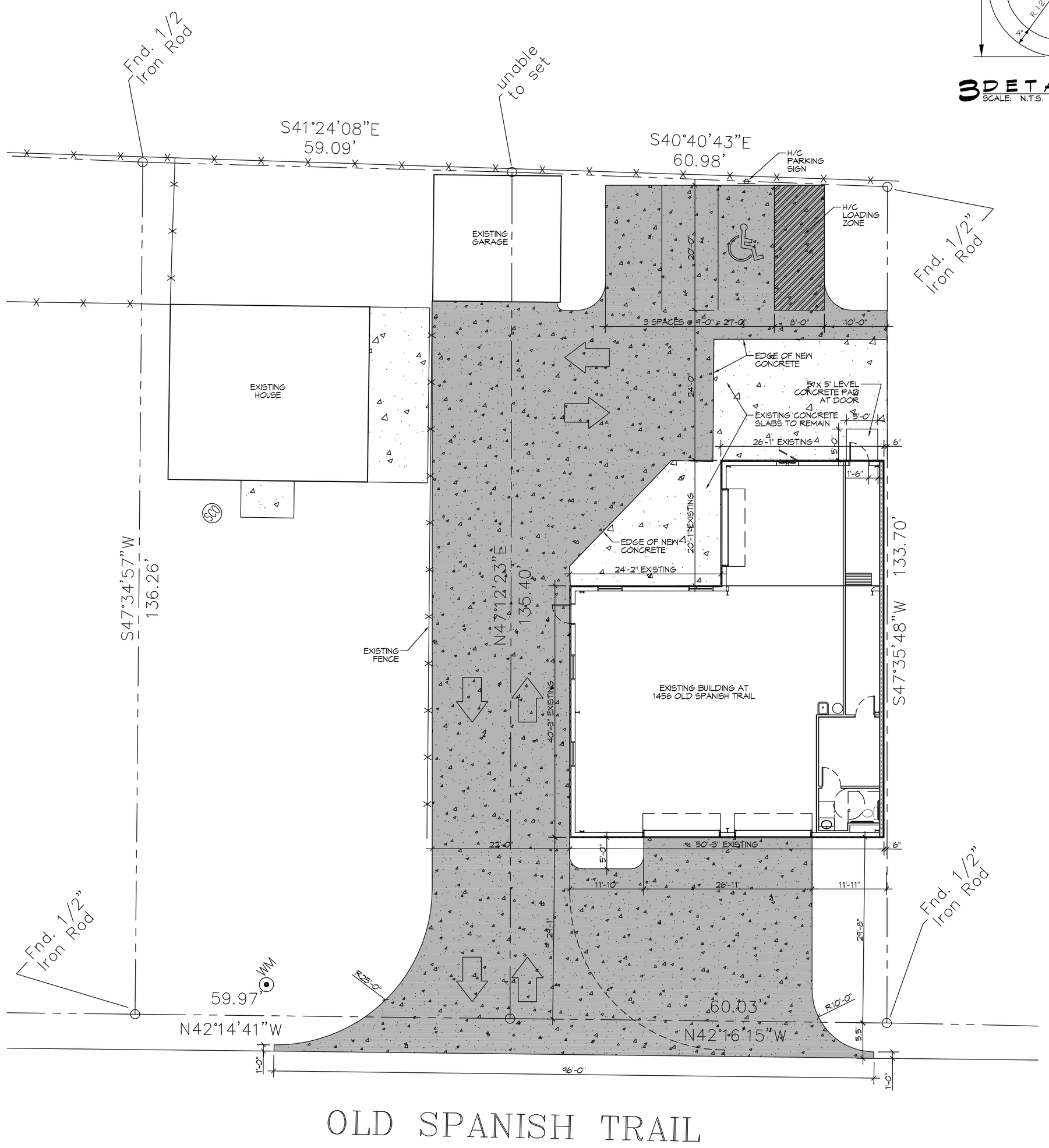

1 SITE PLAN
SCALE: 1"=10'-0"

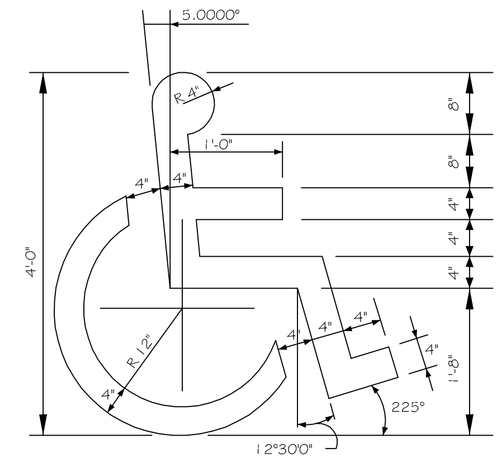

3 DETAIL
SCALE: N.T.S.
HANDICAP SYMBOL

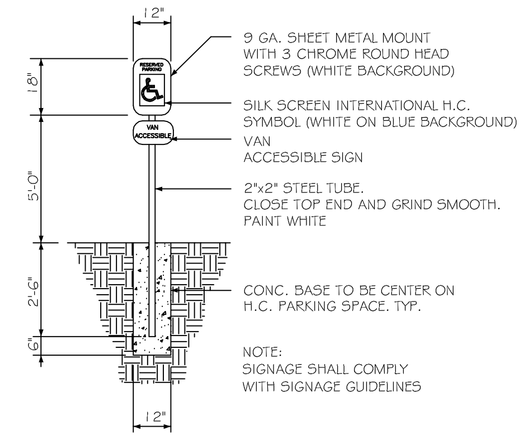

4 DETAIL
SCALE: N.T.S.
HANDICAP PARKING SIGN

GENERAL PAVING NOTES

1. ALL NEW CONCRETE SHALL SHALL HAVE A MINIMUM COMPRESSIVE STRENGTH OF 4,000 PSI AT 28 DAYS AND A MINIMUM THICKNESS OF 6". CONCRETE MIX SHALL BE IN ACCORDANCE WITH THE LATEST REVISION OF ASTM C-150 TYPE 1.
2. CONCRETE PAVING THICKNESS SHALL VARY AS FOLLOWS:
   a. APRONS & LOADING AREAS = 8" THICKNESS (INDICATED WITH CROSS HATCH WHERE OCCURS)
   b. DRIVE LANES & PARKING AREAS = 6" THICKNESS (STANDARD UNO)
3. ALL REINFORCING STEEL SHALL MEET ASTM-A615 (GRADE 60).
4. ALL REINFORCING STEEL SHALL BE SECURELY SUPPORTED TO PREVENT BOTH VERTICAL AND HORIZONTAL MOVEMENT DURING CONCRETE PLACEMENT. ALL CONTROL AND EXPANSION JOINTS SHALL BE LOCATED AND INSTALLED AS SHOWN ON THE PAVING PLAN AND IN ACCORDANCE WITH THE MANUFACTURER'S RECOMMENDATIONS.
5. ALL SUB GRADE FILL SHALL BE SELECT GRANULAR MATERIAL COMPACTED TO 95% STANDARD PROCTOR DENSITY IN A MAXIMUM OF 6" LIFTS.
6. ANY WORK WITHIN THE ROADWAY OR ADJACENT TO THE ROADWAY CAUSING AN INTERFERENCE TO VEHICULAR TRAFFIC MUST CONFORM TO THE REQUIREMENTS SET FORTH BY THE UNIFORM MANUAL OF TRAFFIC CONTROL DEVICES OF THE STATE OF LOUISIANA. THE CONTRACTOR MUST FURNISH ALL NECESSARY TRAFFIC SIGNS AND/OR BARRICADES AND MAINTAIN THEM DURING CONSTRUCTION ACTIVITY.

6" MTL KEYWAY JOINT SYSTEM NOTE:
LONGITUDINAL JOINTS (LJ): No.5 DEFORMED DOWEL ROD 24" L @ 24" O.C.
TRANSVERSE JOINTS (TJ): No.5 SMOOTH DOWEL ROD 24" L @ 24" O.C.

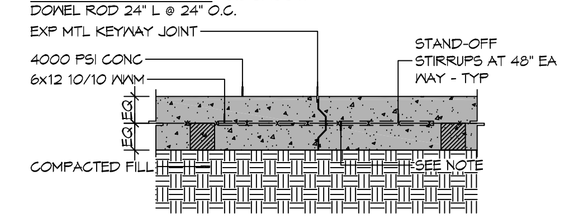

D TYPICAL PAVEMENT JOINT

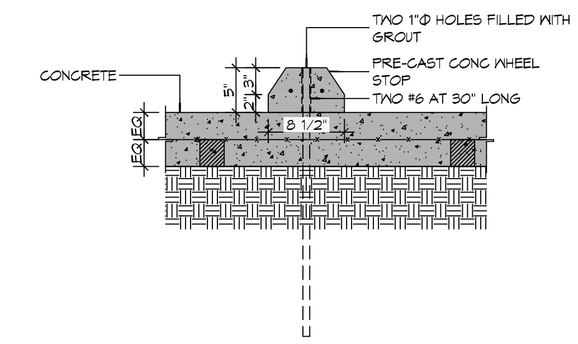

C TYPICAL WHEEL STOP

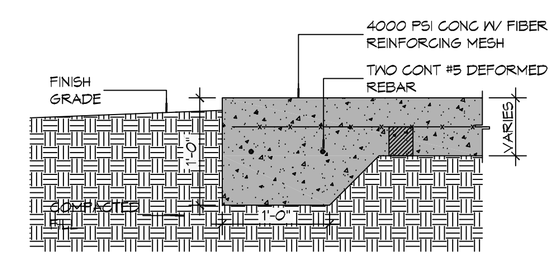

B TYPICAL PAVEMENT EDGE

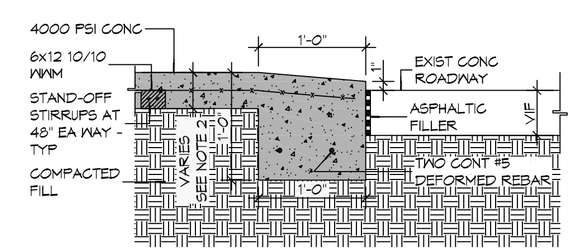

A DRIVEWAY ROLLOVER CURB

2 DETAILS
SCALE: 1" = 1'-0"

DAMMON ENGINEERING, INC.
LOUISIANA & MISSISSIPPI
www.dammonengineering.com
info@dammonengineering.com
PH: 985.649.5832
Chief Engineer: Brian Mistich, PE
554 Old Spanish Trail
Slidell, LA 70458

#	DESCRIPTION	REVISIONS	DATE

SEAL:

PRELIMINARY NOT FOR CONSTRUCTION

OFFICE WAREHOUSE FOR
LESTER RALPH
1456 OLD SPANISH TRAIL
SLIDELL, LA. 70458

JOB No:	2303	DATE:	02-16-17
DRAWN BY:	JTL	CHECKED BY:	CKD

The design shown, as an instrument of service, is and remains the property of Dammon Engineering, and no part thereof shall be used, reused, or reproduced without the express written consent of Dammon Engineering. Any use of this design by others, other than for the purpose for which it was intended, without the express written consent of Dammon Engineering, is prohibited. Dammon Engineering, Inc. cannot verify the accuracy of specifications and materials not specified by Dammon Engineering, Inc.

SHEET TITLE:
SITE PLAN

DRAWING NUMBER:
C101

SHEET No: 00 of #