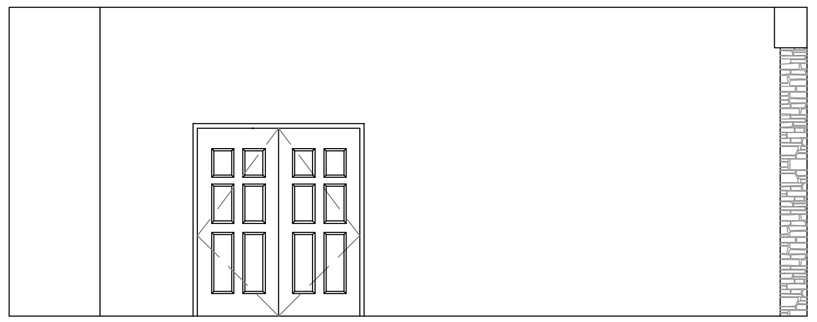

9 LOBBY ELEVATION
SCALE: 1/4"=1'-0"

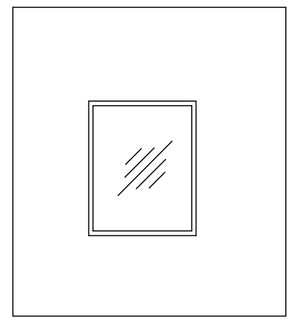

10 RECEPTION ELEVATION
SCALE: 1/4"=1'-0"

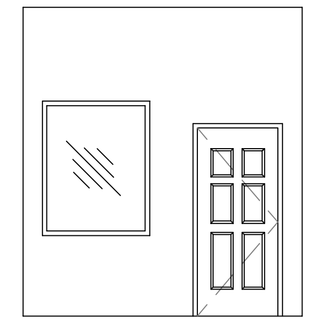

11 RECEPTION ELEVATION
SCALE: 1/4"=1'-0"

REFERENCE NOTES

1. REFER TO DESIGN STANDARDS FOR REQUIREMENTS RELATED TO THIS SHEET. CONTRACTOR IS RESPONSIBLE FOR BUILDING PROJECT IN ACCORDANCE WITH THE ENTIRE DESIGN STANDARDS.
2. REFER TO FF&E DRAWINGS FOR THE FURNITURE & EQUIPMENT REQUIREMENTS. FF&E IS NOT COMPLETED BY DAMMON ENGINEERING AND WILL BE SUBMITTED BY OWNER.

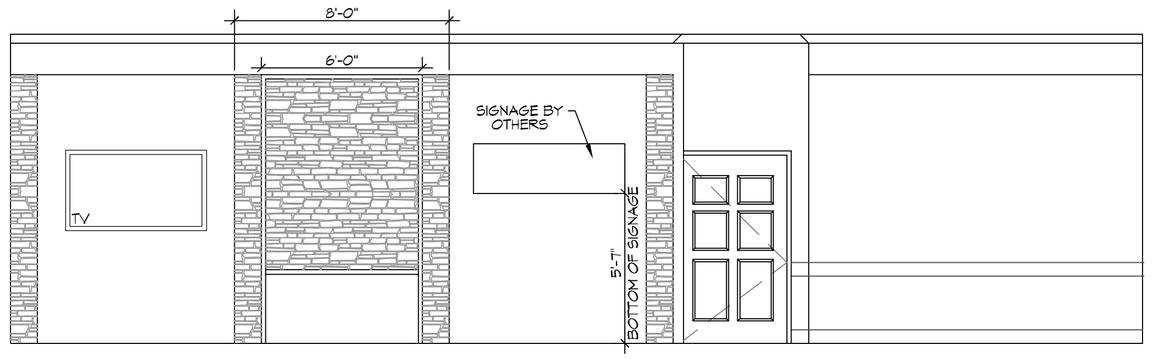

6 LOBBY ELEVATION
SCALE: 1/4"=1'-0"

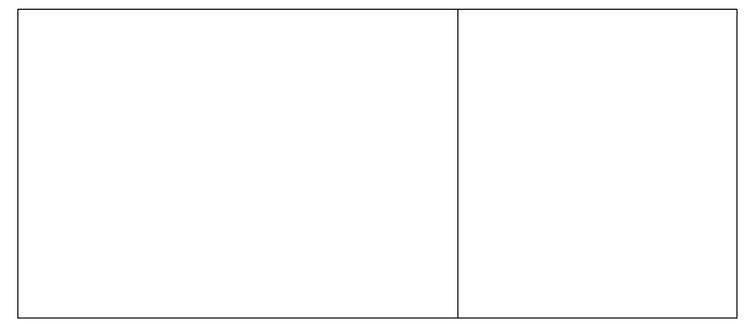

7 LOBBY ELEVATION
SCALE: 1/4"=1'-0"

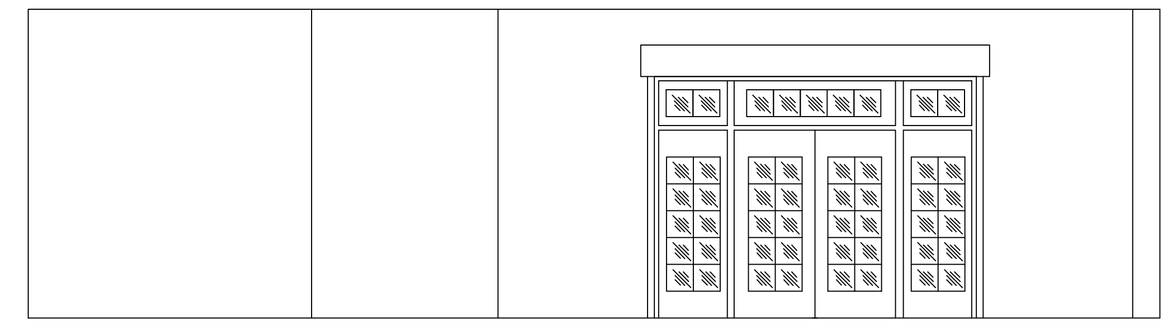

8 LOBBY ELEVATION
SCALE: 1/4"=1'-0"

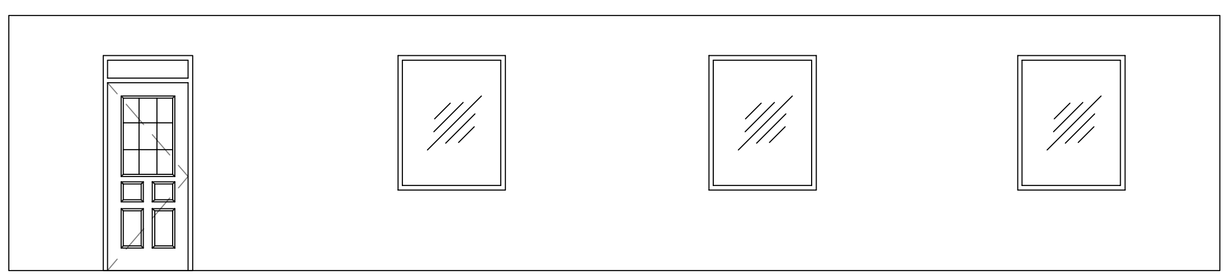

4 EVENT ROOM ELEVATION
SCALE: 1/4"=1'-0"

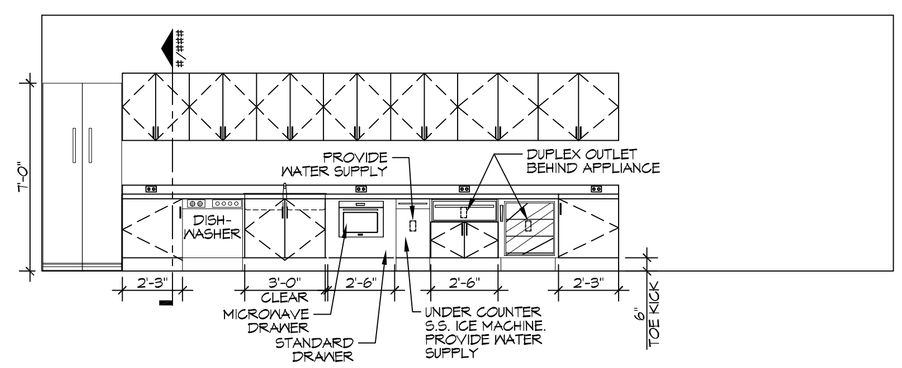

5 EVENT ROOM ELEVATION
SCALE: 1/4"=1'-0"

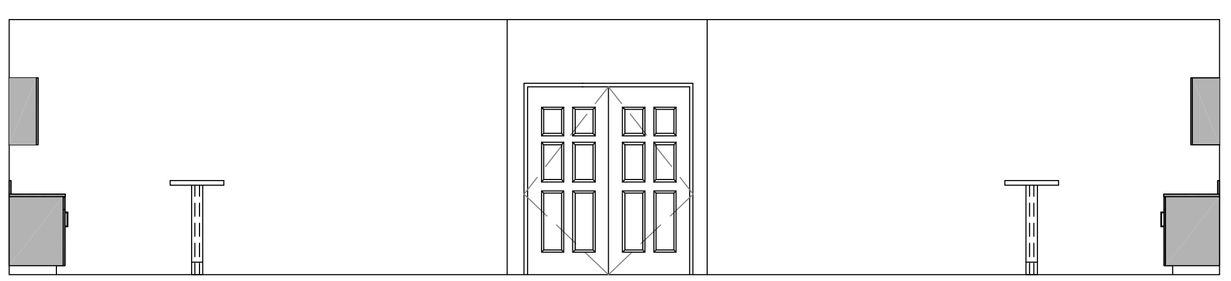

1 EVENT ROOM ELEVATION
SCALE: 1/4"=1'-0"

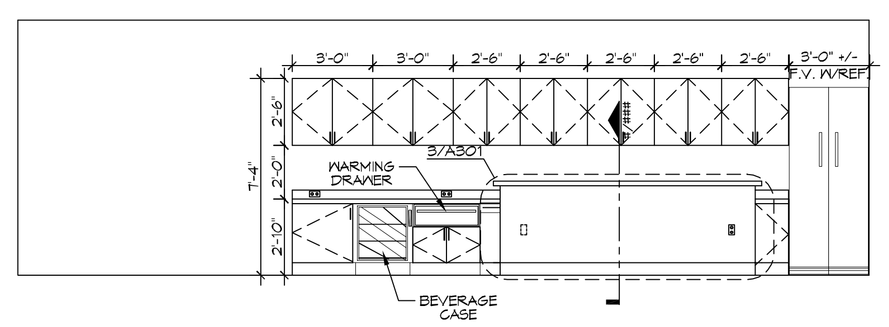

2 EVENT ROOM ELEVATION
SCALE: 1/4"=1'-0"

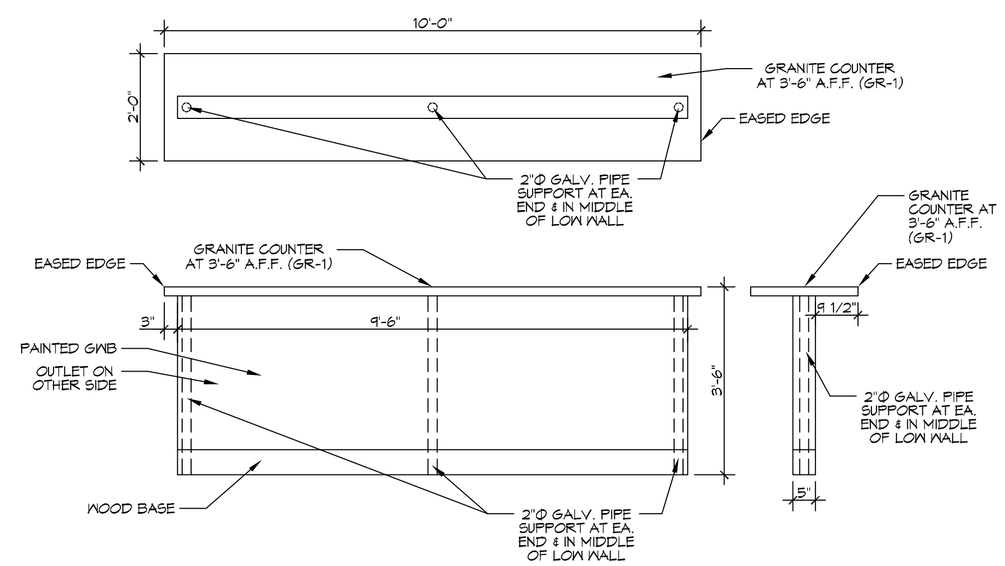

3 EVENT ROOM DETAIL
SCALE: 1/2"=1'-0"

DAMMON ENGINEERING, INC.
LOUISIANA & MISSISSIPPI
www.dammonengineering.com
info@dammonengineering.com
PH: 985.649.5832
Chief Engineer: Brian Mistich, PE
554 Old Spanish Trail
Slidell, LA 70458

REVISIONS

#	DESCRIPTION	DATE

SEAL:

NEW FUNERAL HOME

2281 GAUSE BLVD E
SLIDELL, LA 70461

JOB No:	2360
DATE:	04-18-2018
DRAWN BY:	JASMN
CHECKED BY:	CKD

The seal crimping on specifications, drawings and other papers (documents) affixed to the professional seal of Dammon Engineering, are proprietary and shall remain the property of Dammon Engineering. Reproduction or alteration of these documents without the express written consent of Dammon Engineering, Inc. is prohibited. Any alteration of these documents without the express written consent of Dammon Engineering, Inc. shall void the seal crimping or specifications and contract documents.

SHEET TITLE:
INTERIOR ELEVATIONS

DRAWING NUMBER:
A301

SHEET No: 6 of # 7

FILE NAME: J:\+ Commercial\2360 - Funeral Home on Gause Blvd\Drawings\Current Drawings\A301 - INTERIOR ELEVATIONS.dwg PLOT DATE & TIME: Wednesday, February 27, 2019 10:11:08 AM