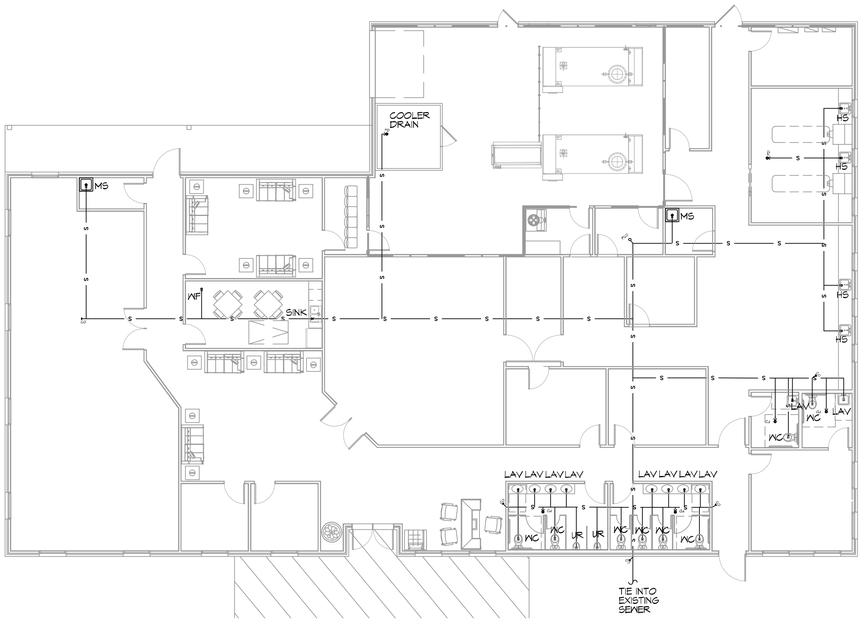

18 PLUMBING PLAN 1ST FLOOR
SCALE: 3/32" = 1'-0"

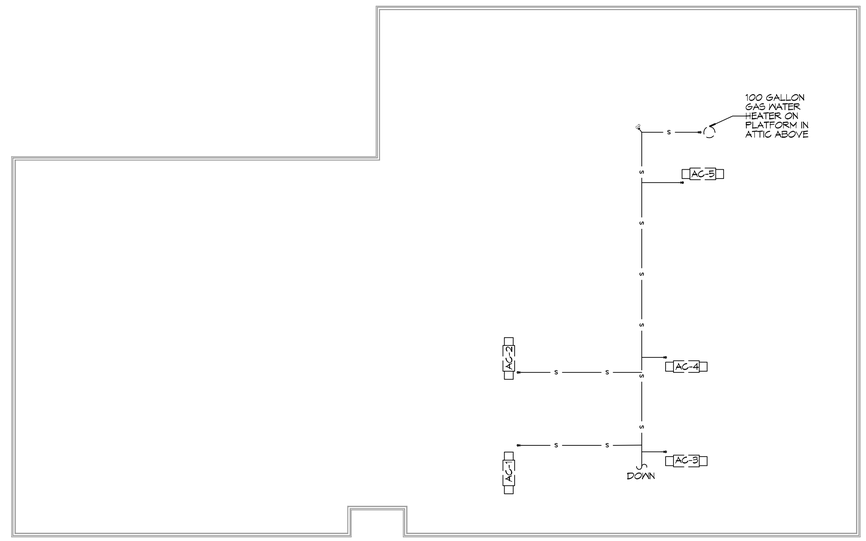

19 PLUMBING PLAN 2ND FLOOR
SCALE: 3/32" = 1'-0"

LEGEND

SYMBOL	DESCRIPTION
—— S —— S ——	SANITARY SEWER
—— V —— V ——	VENT PIPE
FD	FLOOR DRAIN
CO	LINE CLEAN OUT
WCO	WALL CLEAN OUT

GENERAL PLUMBING NOTES

1. SEE VENDOR DRAWINGS.
2. PLUMBING LINES SHOWN ARE DRAWN DIAGRAMMATIC IN NATURE AND REPRESENT CONCEPTUAL ROUTING ONLY. CONTRACTOR IS RESPONSIBLE FOR FIELD VERIFICATION OF ALL ACTUAL CONDITIONS.
3. PROVIDE ALL LABOR, MATERIAL, TRANSPORTATION, SUPERVISION, CLEAN-UP, SERVICES, AND EQUIPMENT FOR A COMPLETE OPERATING SYSTEM. THE SYSTEM SHALL INCLUDE HOT AND COLD WATER PIPING, SEWER AND VENT PIPING, INSULATION, WATER HEATER, HANGERS, VALVES, SUPPORTS WITHOUT ANY RESTRICTIONS TO VOLUME. CUT AND PATCH AS REQUIRED TO INSTALL PIPES.
4. ALL WORK AND MATERIAL SHALL CONFORM STRICTLY TO THE LATEST LOCAL CITY, PARISH, STATE AND NATIONAL GOVERNING CODES. MUST MEET LA STATE PLUMBING CODE 2015 REQUIREMENTS.
5. CONTRACTOR IS TO FIELD VERIFY ALL EXISTING UTILITY LOCATIONS, ELEVATIONS AND SIZES PRIOR TO COMMENCING ANY WORK. CONTRACTOR SHALL PAY NECESSARY FEES FOR THE UTILITES CONNECTIONS.
6. CONTRACTOR IS RESPONSIBLE TO VERIFY THE EXISTING INVERTS AND SET NEW INVERTS OF SEWERAGE AND DRAINAGE PIPES.
7. SEWERAGE LINES 3-INCH AND SMALLER SHALL BE SLOPED 1/4" PER FOOT AND LINES 4-INCH AND LARGER SHALL BE 1/8" PER FOOT.
8. TEST ALL PIPING AT REQUIRED PRESSURE.
9. ALL PLUMBING SHALL BE CLOSELY COORDINATED WITH STRUCTURAL, MECHANICAL SYSTEM AND ELECTRICAL SYSTEMS TO INSURE NO TRADES WILL CONFLICT WITH EACH OTHER.
10. DO NOT SCALE DRAWINGS. SEE ARCHITECTURAL DRAWINGS FOR EXACT LOCATIONS OF DOORS, WINDOWS, WALLS, FIXTURES, ETC.
11. ALL WATER MAINS AND PIPING NOT SHOWN FOR CLARITY, ALL LOCATIONS FIELD VERIFIED.
12. DOMESTIC HOT AND COLD WATER PIPING AND FITTINGS UNDER SLAB SHALL BE ASTM B88 COPPER WATER TUBE, TYPE K, SOFT ANNEALED. NO JOINTS SHALL BE ALLOWED UNDER THE SLAB.
13. DOMESTIC WATER PIPING AND FITTINGS ABOVE THE SLAB SHALL BE ASTM B88 COPPER WATERTUBE, TYPE L. HARD DRAWN WITH COPPER PRESSURE TYPE FITTINGS, ANSI B16.22. THE JOINTS SHALL BE SOLDERED TYPE USING ASTM B32, ALLOY GRADE 95A (95-5) SOLDER.
14. SOIL, WASTE, VENT PIPING AND FITTINGS ABOVE THE SLAB SHALL BE SERVICE WEIGHT CAST IRON PIPE WITH BELL AND SPIGOT ENDS AND ONE PIECE NEOPRENE INSERT TYPE GASKET. USE PVC SCHEDULE 40 OR ABS DWV PIPES AND FITTINGS WHERE PERMITTED BY CODE.
15. ALL WATER PIPING AND FITTINGS ABOVE THE FLOOR SHALL BE INSULATED WITH 1/2" THICK FIBERGLASS INSULATION AND JACKET.
16. ALL ELECTRICAL, MECHANICAL AND PLUMBING ELEMENTS PENETRATING FIRE PARTITIONS SHALL BE FIRE CAULKED. (PENETRATIONS THROUGH RATED CONSTRUCTION SHALL BE SEALED WITH A MATERIAL CAPABLE OF PREVENTING THE PASSAGE OF FLAMES AND HOT GASES WHEN TESTED IN ACCORDANCE WITH ASTM-E814.)
17. SEE ROOF PLAN FOR PLUMBING ROOF PENETRATIONS. ROUTE VENT PIPES IN ATTIC AS NECESSARY.
18. ALL VENTS THROUGH ROOF (VTR) SHALL BE LOCATED A MINIMUM OF 10'-0" FROM ANY MECHANICAL OR NATURAL AIR INTAKE.

PLUMBING ABBREVIATIONS

WCO	WALL CLEAN OUT	EW	EMERGENCY EYE WASH STATION
FCO	FLOOR CLEAN OUT	FD	FLOOR DRAIN
CO	CLEAN OUT	UR	URINAL
VTR	VENT THROUGH ROOF	EDF	ELECTRIC DRINKING FOUNTAIN
TD	TROUGH DRAIN	DFF	DOWN TO FIRST FLOOR
WC	WATER CLOSET	RTU	ROOF TOP UNIT
LV	LAVATORY IN COUNTER	TRP	TO ROOF PIT
LVH	LAVATORY IN COUNTER - ACCESSIBLE	DFF	DOWN TO FIRST FLOOR
SINK	SINK DESIGNATION - SEE FIXTURE SCHEDULE	FRP	FROM ROOF PIT
		WF	WATER FOUNTAIN

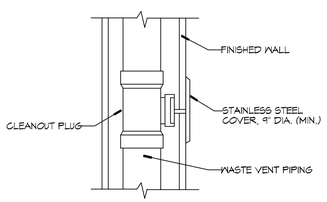

DETAIL
SCALE: NTS — WALL CLEAN OUT

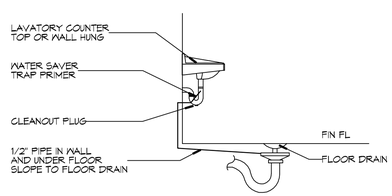

DETAIL
SCALE: NTS — FLOOR DRAIN

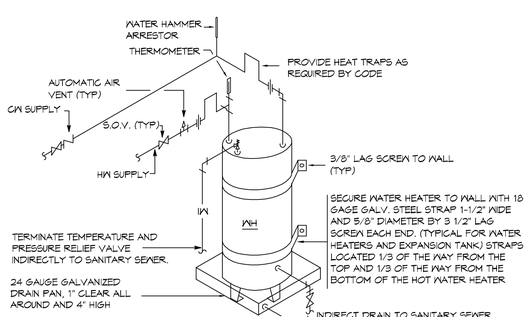

NOTES:
1. A WATERTIGHT PAN WITH 1" DRAIN SHALL BE PROVIDED UNDER WATER HEATER. DRAIN DIRECTLY OUTSIDE.
2. WATER HEATER TEMPERATURE TO BE SET AT 140° F PROVIDE TEMPERING VALVE (SET @ 110°F) FOR ALL HAND SINKS.

DETAIL
SCALE: NTS — WATER HEATER

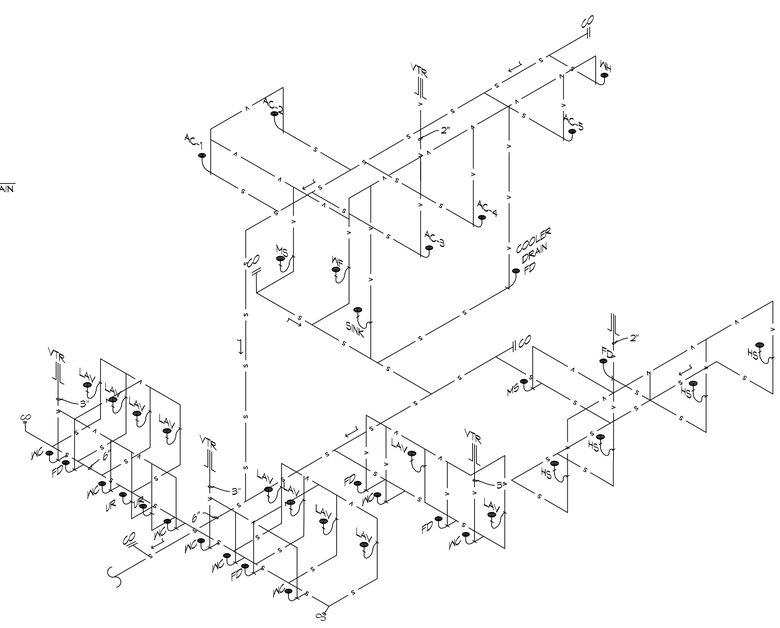

20 PLUMBING RISER
SCALE: N.T.S.

DAMMON ENGINEERING, INC.
LOUISIANA & MISSISSIPPI
www.dammonengineering.com
info@dammonengineering.com
PH: 985.649.5832
Chief Engineer: Brian Mistich, PE
554 Old Spanish Trail
Slidell, LA 70458

#	DESCRIPTION	DATE

REVISIONS

SEAL: STATE OF LOUISIANA — BRIAN A. MISTICH, License No. 30187, PROFESSIONAL ENGINEER

The design shown, the work done, and all products, originals and all alterations thereof are the property of Dammon Engineering, Inc. and shall not be used for any purpose other than the specific project for which they are prepared or adapted without the written consent of Dammon Engineering, Inc. Reproduction by others of work in progress shall be at sole risk of others. Reproduction by others of work in progress shall be at sole risk of others. Reproduction by others of work in progress shall be at sole risk of others.

NEW FUNERAL HOME

BOYD FAMILY FUNERAL HOME

4300 DONNAN ROAD
NEW ORLEANS, LA

JOB No: 23-96 | DATE: 11-10-2023
DRAWN BY: CSD | CHECKED BY: CSD

SHEET TITLE:
PLUMBING PLAN AND PLUMBING RISER DIAGRAM

DRAWING NUMBER:
P101

SHEET No: 13 of # 21