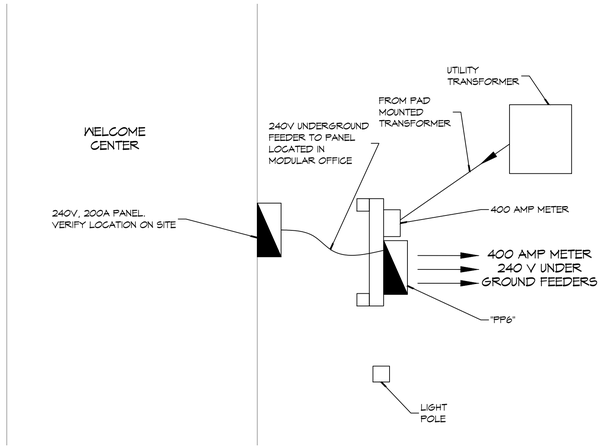

36 OFFICE POWER PLAN
SCALE: 1/4" = 1'-0"

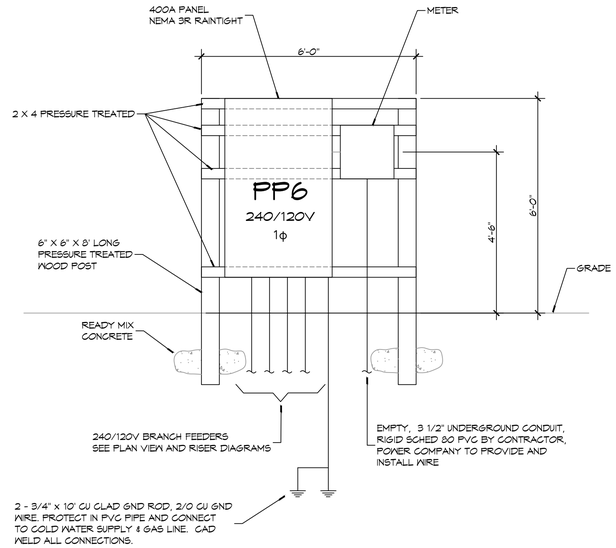

???? EQUIPMENT STAND - PANEL "PP6"
SCALE: 1/2" = 1'-0"

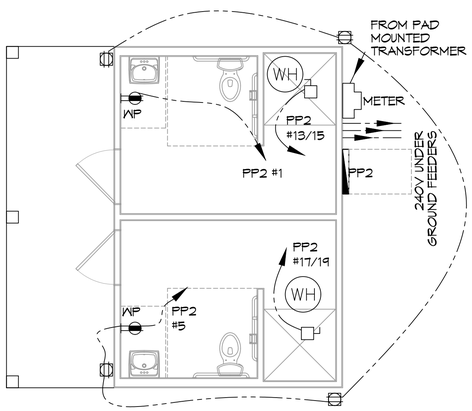

37 RESTROOM POWER PLAN
SCALE: 1/4" = 1'-0"

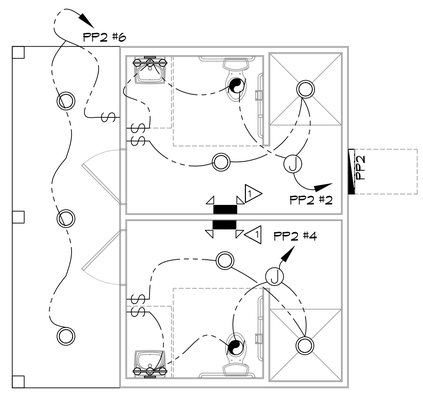

39 RESTROOM LIGHTING PLAN
SCALE: 1/4" = 1'-0"

LIGHTING LEGEND

- EMERGENCY LIGHT FIXTURE
- EXIT LIGHT FIXTURE - WALL MOUNTED
- LED EXTERIOR WALL MOUNTED LIGHT FIXTURE
- LED VANITY LIGHT
- CIRCUIT HOME RUN
- LIGHT SWITCH 120V COMMERCIAL GRADE
- LED RECESSED LIGHT
- EXHAUST FAN SEE MECH.
- JUNCTION BOX

POWER LEGEND

- STANDARD 120V DUPLEX RECEPTACLE, 18" AFF (UNLESS OTHERWISE NOTED)
- GFCI DUPLEX RECEPTACLE
- WETHER PROOF GFI SOFFIT MOUNTED
- STANDARD 240V DRYER RECEPTACLE
- WP WEATHER-PROOF GFCI DUPLEX RECEPTACLE MOUNTED AT 30" AFF (UNLESS OTHERWISE NOTED)
- DISCONNECT

KEYED NOTES

1. PROVIDE CONNECTION TO UN-SWITCHED HOT OF LIGHTING CIRCUIT AND SHALL HAVE 90 MINUTE EMERGENCY BATTERY BACKUP.

GENERAL POWER NOTES

1. ALL WORK SHALL CONFORM TO THE LATEST EDITION OF THE NATIONAL ELECTRICAL CODE, THE GOVERNING ELECTRICAL CODE AND ALL OTHER INSPECTION DEPARTMENTS HAVING JURISDICTION. OBTAIN CERTIFICATES OR APPROVAL WHERE REQUIRED. ELECTRICAL CONTRACTOR SHALL VERIFY ALL WIRE AND CONDUIT SIZES FOR MECHANICAL EQUIPMENT TO BE INSTALLED.
2. ALL MATERIALS FURNISHED SHALL BE NEW AND SHALL BE U.L. LISTED.
3. THE DRAWINGS INDICATE SIZE AND GENERAL LOCATION OF WORK. SCALE DIMENSIONS SHALL NOT BE USED. THE EXACT LOCATION OF ALL LIGHTING FIXTURES, RECEPTACLES AND TELEPHONE OUTLETS, ETC. SHALL BE DETERMINED BY ACTUAL CONDITIONS IN THE FIELD.
4. PRIOR TO BIDDING, CONTRACTOR SHALL VISIT THE JOB SITE AND FAMILIARIZE THEMSELVES WITH THE EXISTING CONDITIONS.
5. ELECTRICAL CONTRACTOR SHALL COORDINATE HIS WORK WITH OTHER TRADES AND WITH OTHER CONTRACTORS WHOSE WORK MAY AFFECT THIS INSTALLATION.
6. ELECTRICAL CONTRACTOR SHALL COORDINATE INCOMING ELECTRICAL SERVICE WITH UTILITY COMPANY AND INCLUDE IN HIS BID ALL CHARGES AND FEES INCURRED IN MODIFICATIONS.
7. ELECTRICAL CONTRACTOR SHALL COORDINATE THE TELEPHONE INSTALLATION WITH THE TELEPHONE COMPANY AND THE GENERAL CONTRACTOR.
8. ELECTRICAL CONTRACTOR, BEFORE INSTALLING ANY OF THE WORK, SHALL SEE THAT IT DOES NOT INTERFERE WITH CLEARANCES REQUIRED FOR FINISHED COLUMNS, HUNG CEILINGS, PLASTER, PARTITIONS, WALLS, ETC. AS SHOWN IN THE ARCHITECTURAL DRAWINGS AND DETAILS. IF ANY WORK IS INSTALLED AND IT LATER DEVELOPS THAT SUCH DETAILS OR DESIGN CANNOT BE FOLLOWED, THE CONTRACTOR, AT HIS OWN EXPENSE, SHALL MAKE SUCH CHANGES IN THE WORK AS DIRECTED BY THE ARCHITECT, AS WELL AS TO PERMIT THE INSTALLATION OF THE ARCHITECTURAL WORK AS SHOWN ON THE PLANS AND DETAILS.
9. PERFORM TEST REQUIRED BY THE OWNER OR THE ENGINEER IN CONNECTION WITH THE OPERATION OF THE ELECTRICAL SYSTEM IN THE BUILDING. ALL TESTS SHALL BE MADE IN ACCORDANCE WITH THE LATEST STANDARD OF THE IEEE AND THE NATIONAL ELECTRICAL CODE.
10. MINIMUM CONDUCTOR SIZE SHALL BE #12, 600V INSULATION. MINIMUM SIZE CONDUIT SHALL BE ¾" ELECTRICAL METALLIC TUBING (EMT) FOR INTERIOR USE, ¾" RIGID ALUMINUM FOR EXTERIOR USE ABOVE GRADE AND 1" SCHEDULE 40 PVC, BURIED A MINIMUM OF 18" FOR NON-VEHICULAR TRAFFIC AREAS, FOR CONDUITS BELOW GRADE . EMT SHALL BE USED WITH METAL STUD CONSTRUCTION AND ALL ASSEMBLY OCCUPANCIES. 6 FT LENGTH MC CABLE IS ALLOWED ABOVE DROPPED CEILING. INTERIOR FITTINGS SHALL BE CAST WHERE EXPOSED ON WALLS, AND EXTERIOR FITTINGS SHALL BE CAST BOXES WITH NEMA 3R COVER(S).
11. CONTRACTOR SHALL INSTALL WIRING AND OTHER CIRCUIT COMPONENTS TO MATCH EQUIPMENT ACTUALLY INSTALLED.
12. ALL 120V RUNS LONGER THAN 60 FEET SHALL BE #10 AWG AND 277V RUNS LONGER THAN 150 FEET SHALL BE #10 AWG UNLESS NOTED OTHERWISE.
13. INSTALL GROUND FAULT RECEPTACLES AT RECEPTACLE LOCATIONS WITHIN 5' OF SINKS OR LAVATORIES, AND AT EXTERIOR LOCATIONS. EXTERIOR RECEPTACLES SHALL ALSO BE WATERPROOF. ALL RECEPTACLES IN A KITCHEN AREA SHALL HAVE GROUND FAULT PROTECTION.
14. BONDING AND GROUNDING SHALL BE IN ACCORDANCE WITH NFPA 70:250-63, NFPR 250-23, 250-71 & 250-72.
15. GROUND NEUTRAL IN ACCORDANCE WITH NFPA 70:250-23b.
16. FUSES SHALL BE ITT CLASS K5, 250 VOLT, 200,000 AMP INTERRUPTING CAP.
17. PROVIDE SERVICES OF A FIRE/SMOKE DETECTION AND ALARM COMPANY TO DESIGN AND INSTALL ALARM SYSTEM TO MEET REQUIREMENTS OF THE STATE FIRE MARSHALL AND THE FIRE DISTRICT.
18. EXTERIOR LIGHTING SHALL BE SHADED OR INWARDLY DIRECTED IN SUCH A MANNER SO THAT NO DIREGT LIGHTING OR GLARE IS CAST BEYOND THE PROPERTY LINE. THE INTENSITY OF SUCH LIGHTING SHALL NOT EXCEED ONE FOOT CANDLE AS MEASURED AT THE ABUTTING PROPERTY LINE.
19. ALL ELECTRICAL, MECHANICAL AND PLUMBING PENETRATING FIRE PARTITIONS SHALL BE FIRE CAULKED. (PENETRATIONS THROUGH RATED CONSTRUCTION SHALL BE SEALED WITH A MATERIAL CAPABLE OF PREVENTING THE PASSAGE OF FLAMES AND HOT GASES WHEN TESTED IN ACCORDANCE WITH ASTM-E814.)
20. VERIFY ELECTRICAL CONNECTIONS PER MANUFACTURER'S RECOMMENDATIONS.

GENERAL LIGHTING NOTES

1. ALL WORK SHALL COMPLY WITH APPLICABLE NATIONAL, STATE, AND LOCAL CODES, RULES, REGULATIONS, AND REQUIREMENTS OF THE SERVICE UTILITY COMPANY.
2. GENERAL CONTRACTOR SHALL NOTIFY THE ARCHITECT IMMEDIATELY IF ANY CONFLICTS OCCUR BETWEEN LIGHTING AND ANY OTHER TRADE. DO NOT PROCEED WITH INSTALLATION IN THAT AREA UNTIL CONFLICT HAS BEEN RESOLVED TO THE SATISFACTION OF THE ARCHITECT AND ENGINEER.
3. REFER TO ARCHITECTURAL DRAWINGS FOR EXACT LOCATION AND MOUNTING INSTRUCTIONS FOR ALL LIGHT FIXTURES. NOTIFY THE ARCHITECT AND ENGINEER OF ANY DISCREPANCIES BETWEEN THESE PLANS AND THE ARCHITECTURAL PLANS RELATING TO QUANTITY, TYPE AND LOCATION OF DEVICES AND/OR FIXTURES.
4. WHEN SPECIFIC LIGHT FIXTURE HAS BEEN SPECIFIED IN THE FIXTURE SCHEDULE, ELECTRICAL CONTRACTOR SHALL PROVIDE COMPLETE ASSEMBLY INCLUSIVE ALL PARTS AND HARDWARE TO INSURE PROPER FUNCTIONING FIXTURE.
5. ALL CONDUCTORS SHALL BE A MINIMUM OF #12 AWG UNLESS NOTED OTHERWISE.
6. ALL 120V RUNS LONGER THAN 60 FEET SHALL BE #10 AWG AND 277V RUNS LONGER THAN 150 FEET SHALL BE #10 AWG UNLESS NOTED OTHERWISE.
7. ALL CONDUCTORS SHALL BE COPPER.
8. WHERE CONDUCTOR SIZES ARE NOTED ON DRAWINGS, THAT WIRE SIZE SHALL BE THROUGH THE ENTIRE RUN UNLESS OTHERWISE NOTED.
9. MOUNTED LIGHT SWITCHES 48" AFF UNLESS NOTED OTHERWISE ON ARCHITECTURAL DRAWINGS.
8. WHERE MORE THAN ONE SWITCH OCCURS IN THE SAME LOCATION, THEY SHALL BE INSTALLED IN A GANG TYPE BOX UNDER ONE COVER PLATE. ALL GANGED SWITCHES SHALL HAVE A COMMON SEAMLESS FACEPLATE. EACH MULTI-GANGED BOX SHALL BE NO MORE THAN SIX (6) SWITCHES WIDE. WHERE MORE THAN SIX (6) SWITCHES ARE SHOWN AT ONE (1) LOCATION, ADDITIONAL MULTI-GANGED BOXES SHALL BE STACKED VERTICALLY AND THE WIDTH OF THE MULTI-GANGS SHALL BE AS EVEN AS POSSIBLE.
9. EACH DIMMER SWITCH SHALL HAVE A WATTAGE RATING 25% HIGHER THAN THE TOTAL WATTAGE OF AL LIGHTS TO BE CONTROLLED BY THE DIMMER. DIMMER SIZES 600, 1000, 1500, AND 2000 WATTS, LUTRON NOVA T-STAR. WHERE SWITCHES ARE GANGED WITH DIMMERS, THE SWITCHES SHALL ALSO BE LUTRON NOVA T-STAR. FLUORESCENT AND LOW VOLTAGE DIMMERS SHALL BE LUTRON NOVA T-STAR.
10. WHERE FLUORESCENT FIXTURES ARE SHOWN TO BE DIMMED, THE FIXTURES SHALL HAVE DIMMING TYPE BALLASTS WHICH ARE COMPATIBLE WITH THE SPECIFIED DIMMERS.
11. WHERE LED FIXTURES/LAMPS ARE SHOWN TO BE DIMMED, THE DIMMER SHALL BE COMPATIBLE WITH THE FIXTURE/LAMP SPECIFIED OR PROVIDED.
12. ALL EMERGENCY EXIT LIGHT FIXTURES SHALL HAVE 90 MINUTE BATTERY BACKUP WITH INTEGRAL TEST BUTTON AND SHALL BURN CONTINUOUSLY.
13. ALL FLUORESCENT FIXTURES THAT UTILIZE DOUBLE-ENDED LAMPS AND CONTAIN BALLASTS SHALL BE PROVIDED WITH A DISCONNECTING MEANS IN ACCORDANCE WITH NEC 410.73G.

DAMMON ENGINEERING, INC.
LOUISIANA & MISSISSIPPI
www.dammonengineering.com
info@dammonengineering.com
PH: 985.649.5832
Chief Engineer: Brian Mistich, PE
554 Old Spanish Trail
Slidell, LA 70458

#	DESCRIPTION	DATE

REVISIONS

SEAL:

NEW RECREATIONAL R/V SITE
EXIT 1 R.V. RESORT, LLC.
GLYDE METTZER ROAD
NICHOLSON MS MISSISSIPPI 39466

JOB No:	2436
DATE:	03-26-2024
DRAWN BY:	CKD
CHECKED BY:	BAM

The above drawing and specifications, designs and arrangements represented thereby are and shall remain the property of Dammon Engineering and no person thereof shall be used in any way prejudicial to the interests of the undersigned without their consent. Dammon Engineering, Inc. Assumes no responsibility for any changes made to the original design without written approval or consent of Dammon Engineering, Inc. Reproduction, in whole or in part, without written permission of Dammon Engineering, Inc. is prohibited.

SHEET TITLE:
ELECTRICAL POWER PLANS

DRAWING NUMBER:
E101

SHEET No: 16 of 19

FILE NAME: J:_Closed Jobs_Commercial\2436 - Fleet Moorings RV site MS\Current Drawings\E101 - Power and Lighting Plan.dwg PLOT DATE & TIME: Tuesday, April 9, 2024 2:09:49 PM