PANEL SCHEDULE

VOLTS: 120/208 PHASE: 3 WIRE: 4 MARK P1 MAINS: 225

CKT No.	DEVICE AMP TRIP	DEVICE POLES	DESCRIPTION	CONN. LOAD (WATTS) OA	CONN. LOAD (WATTS) OC	DEM %	DEM WATTS	COND	WIRE
1	20	1	TUNNEL LIGHTING	1000	1600	100			
3	20	1	PORCH LIGHTING	400	640	100			
5	20	1	VACUUM LIGHTING			100			
7	20	1	VACUUM LIGHTING			100			
9	20	1	SPARE	1120		100			
11	25	2	EXHAUST FAN	1500		100			
13	20	1	BATH EXHAUST FANS	300		100			
15	15	1	CONTROL_120V (1-AB)			100			
17	20	1	RECEPT EQUIP. ROOM		720	100			
19	20	1	RECEPT EQUIP. OFFICE		720	100			
21	15	1	AIR DRYER (10-L)			100			
23			SPARE			100			
25			SPARE			100			
27			SPARE			100			
29			SPARE			100			
31			SPARE			100			
33			SPARE			100			
35			SPARE			100			
37			SPARE			100			
39			SPARE			100			
41			SPARE			100			

CKT No.	DEVICE AMP TRIP	DEVICE POLES	DESCRIPTION	CONN. LOAD (WATTS) OA	CONN. LOAD (WATTS) OC	DEM %	DEM WATTS	COND	WIRE
2	20	1	E.ROOM LIGHTING/OFFICE	800	740	100			
4	20	1	EXTERIOR LIGHTING		525	100			
6	20	1	NEON SIGNS			100			
8	20	1	NEON SIGNS			100			
10			SPARE			100			
12	20	1	PAY STATION (20-C)			100			
14	20	1	PAY STATION (20-C)			100			
16	20	1	SPARE			100			
18	20	1	GATE (20-D)			100			
20	20	1	GATE (20-D)			100			
22	20	1	SPARE			100			
24	20	1	INPUT TERMINAL (20-B)			100			
26	20	1	RELAY BOX (20-)			100			
28	20	1	MENU SIGN (30-i)			100			
30	20	1	MENU SIGN (30-i)			100			
32	20	1	MENU SIGN (30-i)			100			
34	20	1	SERVER COMPUTER			100			
36	20	1	RECEIVED SIGN (30-G)			100			
38			SPARE			100			
40			SPARE			100			
42			SPARE			100			

TOTALS

A.I.C. RATING (VERIFY)
MOUNTING SURFACE

TOTAL CONNECTED _____ WATTS
TOTAL DEMAND _____ WATTS
TOTAL AMPS _____ AMPS

PANEL SCHEDULE

VOLTS: 120/208 PHASE: 3 WIRE: 4 MARK P2 MAINS: 200

CKT No.	DEVICE AMP TRIP	DEVICE POLES	DESCRIPTION	CONN. LOAD (WATTS) OA	CONN. LOAD (WATTS) OC	DEM %	DEM WATTS	COND	WIRE
1			SPARE			100			
3	15	3	RECLAIM UNIT (1-A)			100			
5						100			
7						100			
9	15	3	OZONE UNIT (1-B)			100			
11						100			
13						100			
15			SPARE			100			
17	20	3	COMPRESSOR.7.5HP (10-A)			100			
19						100			
21						100			
23			SPARE			100			
25	20	3	COMPRESSOR.7.5HP (10-A)			100			
27						100			
29						100			
31			SPARE			100			
33			SPARE			100			
35			SPARE			100			
37			SPARE			100			
39			SPARE			100			
41			SPARE			100			

CKT No.	DEVICE AMP TRIP	DEVICE POLES	DESCRIPTION	CONN. LOAD (WATTS) OA	CONN. LOAD (WATTS) OC	DEM %	DEM WATTS	COND	WIRE
2			SPARE			100			
4			SPARE			100			
6	15	3	RO UNIT (1-D)			100			
8						100			
10						100			
12	15	3	RO REPRESSURIZER (1-E)			100			
14						100			
16						100			
18			SPARE			100			
20			SPARE			100			
22	15	3	RO REJECT PUMP (1-X)			100			
24						100			
26						100			
28			SPARE			100			
30			SPARE			100			
32			SPARE			100			
34			SPARE			100			
36			SPARE			100			
38			SPARE			100			
40			SPARE			100			
42			SPARE			100			

TOTALS

A.I.C. RATING (VERIFY)
MOUNTING SURFACE

TOTAL CONNECTED _____ WATTS
TOTAL DEMAND _____ WATTS
TOTAL AMPS _____ AMPS

GC= GENERAL CONTRACTOR
SCW = SONNYS (CARWASH INSTALLER)

11.16.05

ELECTRICAL SPECIFICATIONS
GENERAL CONTRACTOR

A. GENERAL PROVISIONS

1. THE WORK SHALL CONSIST OF FURNISHING LABOR, EQUIPMENT, AND MATERIALS TO PROVIDE THE COMPLETE INTEGRATED AND PROPER FUNCTIONING SYSTEMS AS SHOWN ON THE DRAWINGS.
2. SCOPE OF WORK INCLUDES, BUT IS NOT LIMITED TO, FURNISHING, INSTALLING AND TERMINATING ALL 3 PHASE, 1 PHASE, COMPUTER/CONTROL POWER PER THESE DRAWINGS, AND SONNY'S INSTALLATION MANUALS.
3. ALL WORK SHALL BE DONE IN CONFORMANCE WITH THE LATEST EDITION OF THE NATIONAL ELECTRICAL CODE, ALL APPLICABLE FEDERAL, STATE AND LOCAL REGULATIONS AND ORDINANCES.
4. ALL EQUIPMENT AND MATERIALS PROVIDED SHALL BE NEW AND IN CONFORMANCE WITH APPLICABLE PROVISIONS OF N.E.M.A., A.N.S.I., U.L., ETC.
5. THE ELECTRICAL CONTRACTOR SHALL COORDINATE HIS WORK WITH THAT OF OTHER TRADES SO AS TO AVOID INTERFERENCE.
6. THE DRAWINGS ARE DIAGRAMMATIC AND INDICATE GENERAL LAYOUT OF ELECTRICAL SYSTEMS. FIELD VERIFICATIONS OF DIMENSIONS IS DIRECTED.
7. SECURE PERMITS AND INSPECTIONS REQUIRED BY STATE AND LOCAL LAWS AND ORDINANCES.
8. UPON COMPLETION OF THE WORK, FURNISH TO THE OWNER CERTIFICATES OF FINAL INSPECTIONS AND APPROVALS FROM AUTHORITIES HAVING JURISDICTION.
9. ALL WORK SHALL BE GUARANTEED FOR A PERIOD OF ONE (1) YEAR FROM THE DATE OF FINAL ACCEPTANCE BY THE OWNER.

B. RACEWAYS

1. ALL WIRING SHALL BE INSTALLED IN APPROVED RACEWAYS UNLESS OTHERWISE INDICATED.
2. MINIMUM CONDUIT SIZE SHALL BE 1/2" TRADE SIZE.
3. USE FLEXIBLE CONDUIT FOR SHORT FINAL CONNECTIONS TO VIBRATING EQUIPMENT SUCH AS MOTORS AND TRANSFORMERS. LIQUID-TIGHT FLEXIBLE CONDUIT SHALL BE USED IN DAMP AND WET LOCATIONS. ALL BLOWERS CONNECTION MUST HAVE 24" SERVICE DRIP LOOP TO ALLOW MOVEMENT OR MAINTENANCE. FLEXIBLE CORDS SHALL BE USED WHERE CALLED FOR ON THE PLANS.
4. EXPOSED CONDUITS SHALL BE RUN PARALLEL TO BUILDING LINES.
5. DO NOT INSTALL CONDUITS LARGER THAN 1/3 THE SLAB THICKNESS IN CONCRETE SLABS.
6. PROVIDE APPROVED FIRE STOPPING MATERIALS AT ALL PENETRATIONS THROUGH FIRE RATED FLOORS AND WALLS TO PREVENT THE PASSAGE OF SMOKE, FIRE, TOXIC GAS OR WATER THROUGH THE PENETRATION EITHER BEFORE, DURING, OR AFTER A FIRE, AS REQUIRED BY ARTICLE 300-21 OF THE N.E.C.
7. PROVIDE CABLE SUPPORTS IN ACCORDANCE WITH ARTICLE 300 OF THE N.E.C
8. PROVIDE EXPANSION FITTINGS IN CONDUIT RUNS CROSSING STRUCTURAL EXPANSION JOINTS.

C. CONDUCTORS

1. ALL WIRING SHALL BE COPPER.
2. CONDUCTORS SHALL BE RATED 600V. WITH TYPE THWN/THHN INSULATION.
3. WIRES SHALL BE STRANDED CONDUCTOR

D. CONNECTORS

1. ALL WIRE CONNECTIONS FOR 10HP MOTORS OR LARGER MUST BE SPLIT BOLT CONNECTORS OR EQUIVALENT APPROVED BY N.E.C AND/OR MANUFACTURER.

E. LIGHTING PANELS

1. PROVIDE LIGHTING PANELS AS INDICATED ON THE PLANS AND AS SPECIFIED HEREIN. ALL PANELS SHALL BE DEAD FRONT, CIRCUIT BREAKER TYPE. AND SHALL BEAR THE U.L. LABEL AS WELL AS MEET ALL APPLICABLE NEMA REQUIREMENTS.
2. UNLESS OTHERWISE NOTED, TOP OF PANELS SHALL BE MOUNTED 6"-0" A.F.F.
3. ALL PANELS SHALL HAVE TYPEWRITTEN CIRCUIT DIRECTORIES MOUNTED INSIDE OF DOOR.
4. PANELS SHALL BE SUITABLE FOR THE SERVICE RATING AND THE A.I.C. RATING INDICATED ON THE PANEL SCHEDULES.
5. ALL BREAKERS SHALL BE FULL SPACE, INDIVIDUAL FRAME TYPE, NO "PIGGYBACK" OR TANDEM BREAKERS WILL BE PERMITTED.

F. SAFETY SWITCHES

1. SAFETY SWITCHES SHALL BE HEAVY DUTY TYPE NON-FUSIBLE WITH POLES, AMPERE AND SERVICE RATINGS AS INDICATED ON THE PLANS. LUGS SHALL BE U.L. LISTED FOR CU.-AL.
2. ENCLOSURES FOR SAFETY SWITCHES SHALL BE NEMA 1, EXCEPT FOR SWITCHES MARKED "WP" (WEATHERPROOF) SHALL BE NEMA 4X.

2.A ( )-DISCONNECTS TO BE MOUNTED IN TUNNEL OR OTHER AREAS NOT WITHIN 50 L.F. OR L.O.S. OF MCC IN CONFORMANCE WITH N.E.C. AND/OR LOCAL CODES..ALSO TO BE TYPE 4X NON-METALLIC ENCLOSURES, NON-FUSED SIZED FOR LOAD. DISCONNECTING MEANS SHALL NOT BE REQUIRED WHERE SUCH A LOCATION OF THE DISCONNECTING MEANS IS IMPRACTICABLE OR INTRODUCES ADITIONAL OR INCREASED HAZARDS TO PERSON OR PROPERTY. N.E.C. (ARTICLE 430.102-B-a)

LEGEND:

- SURFACE MOUNTED Counduit
- CONCEALED Counduit
- WIRED TO CBP
- WIRED TO CBP (3P) Disconnect Required
- WIRED TO CBP (3P)
- WIRED TO MCC
- WIRED TO MCC Disconnect Required
- JUNCTION BOX (J)

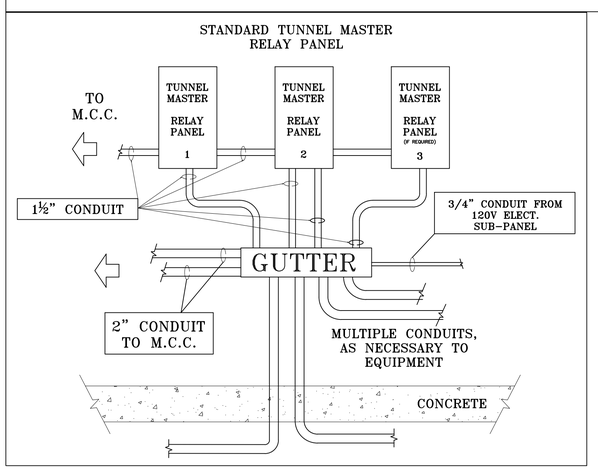

CONTRACTOR SHALL USE THE CARWASH SUPPLIER DWGS FOR CONNECTING EQUIPMENT.

NOTE: SEE EQUIPMENT SUPPIER'S DRAWINGS FOR EQUIPMENT, ELECTRICAL, CONDUIT, AND WIRING REQUIREMENTS PRIOR TO COMMENCING ANY WORK. CONTRACTOR SHALL VERIFY ALL ELECTRICAL LOADS.

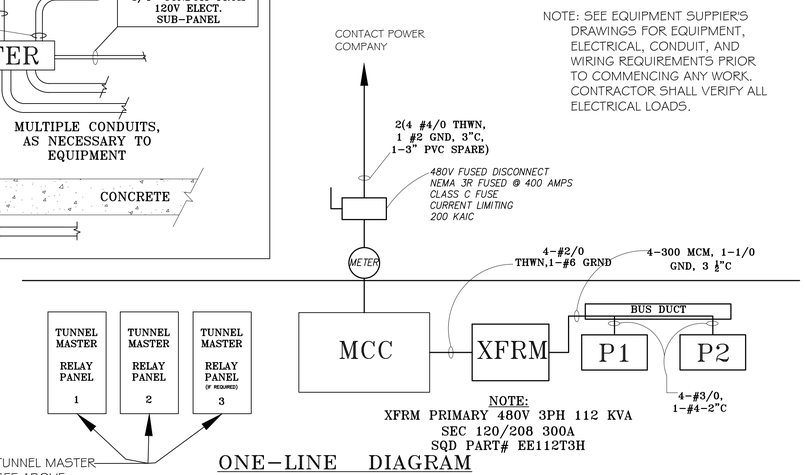

NOTE:
XFRM PRIMARY 480V 3PH 112 KVA
SEC 120/208 300A
SQD PART# EE112T3H

ONE-LINE DIAGRAM

DAMMON ENGINEERING, INC.
LOUISIANA & MISSISSIPPI
www.dammonengineering.com
info@dammonengineering.com
PH: 985.649.5832
Chief Engineer: Brian Mistich, PE
Sand Creek Trace
Slidell, LA 70458

#	DESCRIPTION	DATE

REVISIONS

SEAL: BRIAN A. MISTICH LICENSED PROFESSIONAL ENGINEER 20971 STATE OF MISSISSIPPI

A NEW CARWASH FOR
CHEEKY MONKEY CARWASH

WEST FRONTAGE DRIVE
WIGGINS, MISSISSIPPI 39577

DATE:	09-22-2024
JOB No:	2024
DRAWN BY:	CKD
CHECKED BY:	BAM

THIS DOCUMENT, PREPARED BY DAMMON ENGINEERING, INC. IS AN INSTRUMENT OF SERVICE AND IS PROPRIETARY TO DAMMON ENGINEERING, INC. THIS DOCUMENT MAY NOT BE REPRODUCED OR TRANSMITTED IN WHOLE OR IN PART IN ANY FORM OR BY ANY MEANS, ELECTRONIC OR MECHANICAL, INCLUDING PHOTOCOPYING, RECORDING, OR BY ANY INFORMATION STORAGE AND RETRIEVAL SYSTEM, WITHOUT WRITTEN PERMISSION OF DAMMON ENGINEERING, INC. THIS DOCUMENT IS PROPERTY OF DAMMON ENGINEERING, INC. AND MUST BE RETURNED UPON REQUEST. ANY REUSE OF THIS DOCUMENT WITHOUT WRITTEN CONSENT OF DAMMON ENGINEERING, INC. IS PROHIBITED AND WILL BE PROSECUTED TO THE FULLEST EXTENT OF THE LAW.

SHEET TITLE:
ELECTRICAL EQUIPMENT & RISER

DRAWING NUMBER:
E103

SHEET No: 10 of 10