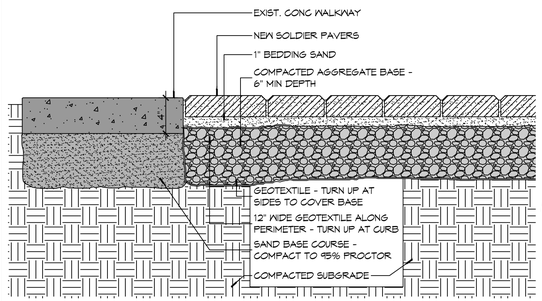

2 WALKWAY DETAIL
SCALE: 1 1/2"=1'

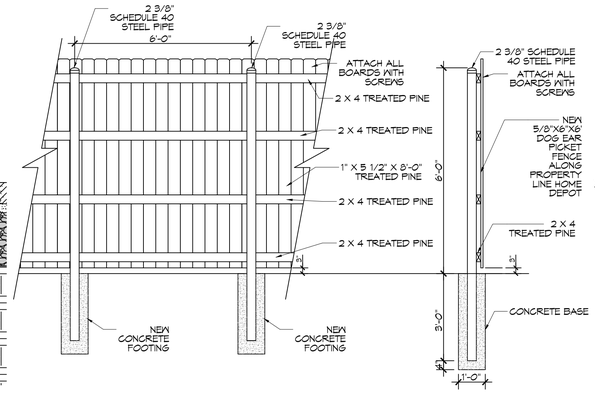

3 SIX FOOT FENCE DETAIL
SCALE: 3/8" = 1'-0"

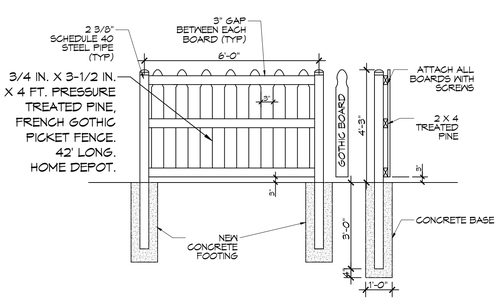

4 FOUR FOOT FENCE DETAIL
SCALE: 3/8" = 1'-0"

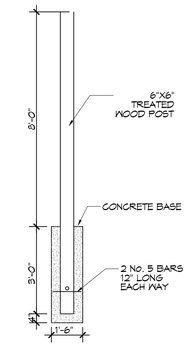

5 LIGHT POLE
SCALE: 3/8" = 1'-0"

GENERAL NOTES

1. SIDEWALK RADII DIMENSIONS ARE TO SIDEWALK CENTERLINE UNLESS NOTED OTHERWISE.
2. CENTER POINT FOR RADII ARE IDENTIFIED AS WORKPOINT (WP).
3. MAXIMUM SIDEWALK INCLINE SHALL NOT EXCEED 5%.
4. WHERE CROSS SLOPE OCCURS, SLOPE SHALL NOT EXCEED 5% AND SLOPE IN THE DIRECTION OF ROBERT STREET.
5. SLOPE PROFILE OF NEW SIDEWALK SHALL CONFORM TO EXIST ADJACENT GRADE ELEVATIONS AT ENDS OF FORMS PROVIDED THAT SLOPE CONFORMS TO NOTE 3.
6. CONTRACTOR SHALL FIELD VERIFY EXISTING LANDMARKS, LOCATIONS, CONDITIONS PRIOR TO CONSTRUCTION AND NOTIFY ARCHITECT WHERE ANY DISCREPANCIES WITH CONSTRUCTION OCCUR.
7. ALL DIMENSIONS ARE ±.

BRICK COUNT

4"X8" ENGRAVED TILE BRICKS - 2,804 ±

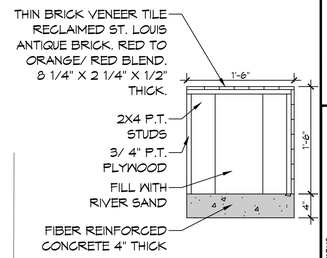

6 BRICK BENCH SEAT
SCALE: 1" = 1'-0"

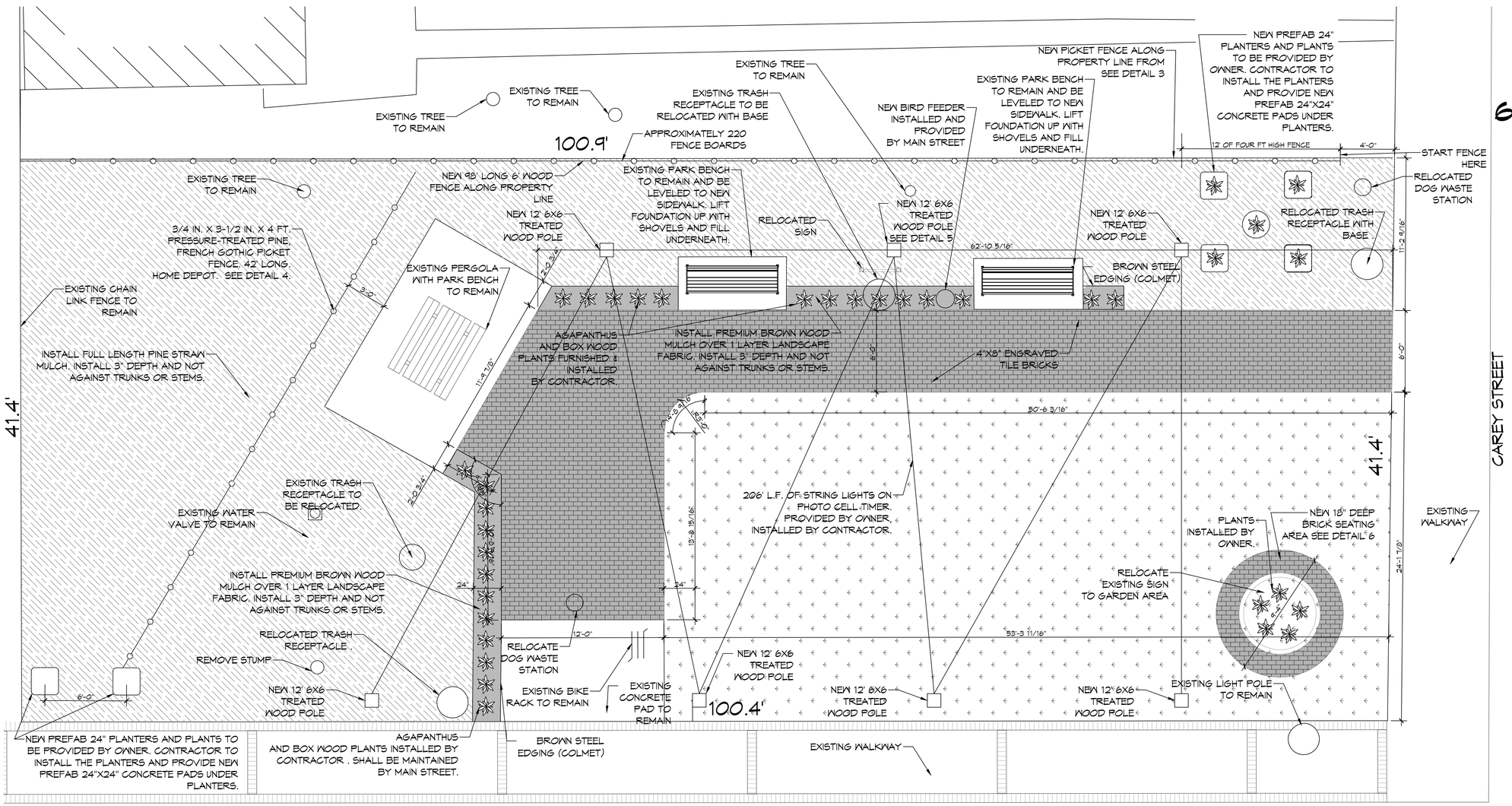

1 SITE PLAN
SCALE: 1/4"=1'-0"

DAMMON ENGINEERING, INC.
LOUISIANA & MISSISSIPPI

www.dammoneng.com
info@dammoneng.com
PH: 985.649.5832

Chief Engineer: Brian Mistich, PE
Staff Engineer: Tim Trail
Slidell, LA 70458

#	DESCRIPTION	DATE

REVISIONS

SEAL:

PARK IMPROVEMENT

MAIN STREET SLIDELL

2302 CAREY ST.
SLIDELL, LA. 70458

JOB No:	2024	DATE:	08-01-2024
DRAWN BY:	CAD	CHECKED BY:	CAD

THIS DOCUMENT IS THE PROPERTY OF DAMMON ENGINEERING, INC. ALL RIGHTS RESERVED. THE DOCUMENT MAY NOT BE REPRODUCED OR TRANSMITTED IN WHOLE OR IN PART, IN ANY FORM OR BY ANY MEANS, ELECTRONIC, MECHANICAL, PHOTOCOPYING, RECORDING, OR OTHERWISE, WITHOUT THE PRIOR WRITTEN PERMISSION OF DAMMON ENGINEERING, INC. THE DOCUMENT IS PROVIDED FOR USE ONLY FOR THE PROJECT FOR WHICH THE SAME WAS PREPARED AND RENDERED AND WITHOUT LIMITING THE FOREGOING, NO OTHER USE OR REPRODUCTION IS PERMITTED WITHOUT THE PRIOR WRITTEN CONSENT OF DAMMON ENGINEERING, INC.

SHEET TITLE:
PARK IMPROVEMENTS

DRAWING NUMBER:

C100

SHEET No: 1 of 1

FILE NAME: J:_Commercial\Main Street Slidell\Current Drawings\C100 - Site Plan.dwg PLOT DATE & TIME: Thursday, August 1, 2024 7:43:13 AM