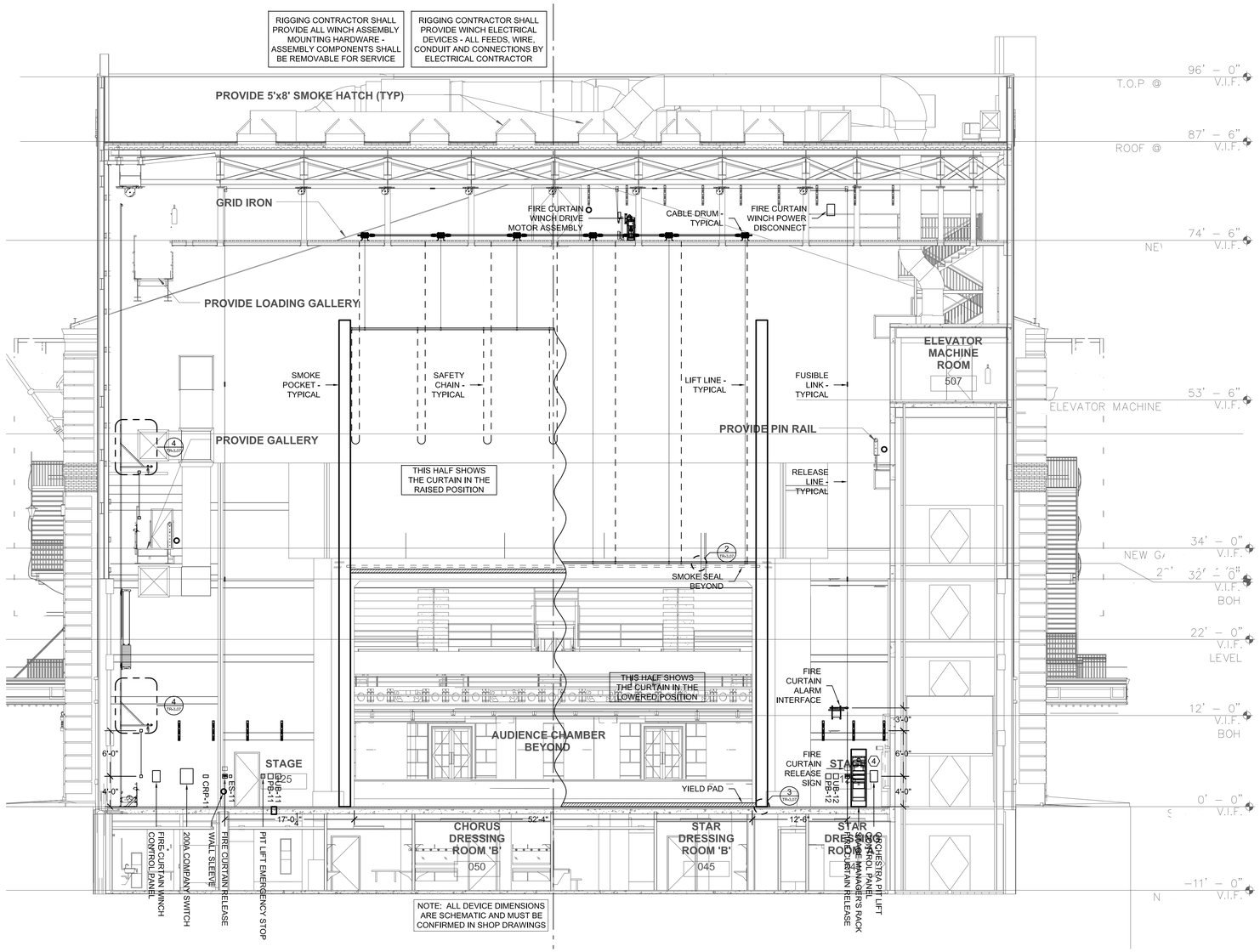

1 TR-3.07 THEATRE RIGGING PROSCENIUM ELEVATION
SCALE: 1/8" = 1'-0"

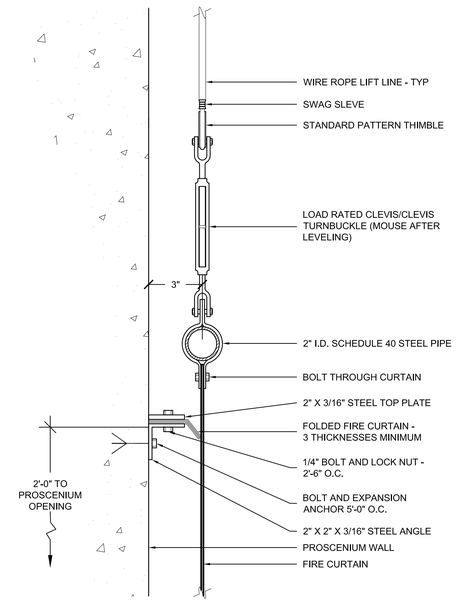

2 TR-3.07 SECTION DETAIL AT SMOKE SEAL
SCALE: 3" = 1'-0"

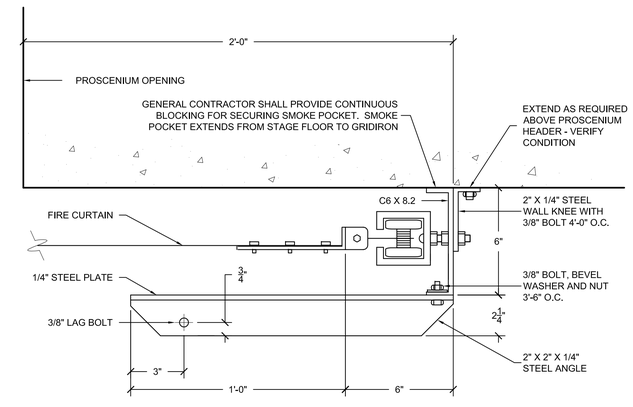

3 TR-3.07 SECTION DETAIL AT SMOKE POCKET
SCALE: 3" = 1'-0"

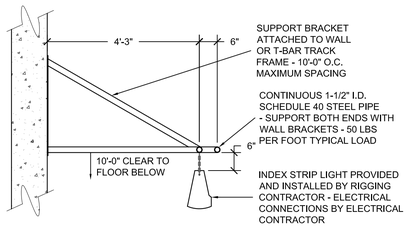

4 TR-3.07 SECTION DETAIL AT OUTRIGGER BATTEN
SCALE: 1/2" = 1'-0"

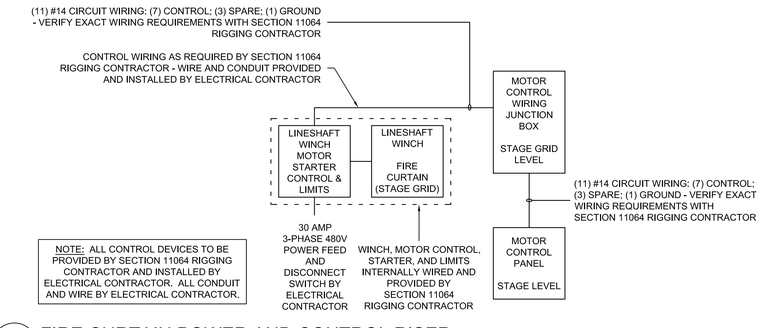

5 TR-3.07 FIRE CURTAIN POWER AND CONTROL RISER
SCALE: NO SCALE

RIGGING ACCESSORY SCHEDULE	
QUANTITY	ITEM - REFER TO SPECIFICATIONS FOR DETAIL
12	8" SPOT BLOCKS
4	600' UNCUT LENGTHS OF 5/8" SPOT ROPE
24	BELAYING PINS
12	SAND BAGS
7	CHAIN HOISTS
1	CHAIN HOIST TROLLY - GRID HATCH
7	CHAIN HOIST CONTROL PENDANT
12	25'-0" CHAIN HOIST POWER EXTENSION CABLE
12	25'-0" CHAIN HOIST CONTROL EXTENSION CABLE
6	2'-0" x 25'-0" HEAT RESISTANT BORDERS
PER SPEC	CANVAS HAMPERS
4	BEAM CLAMPS
12	PIPE CLAMPS

6 TR-3.07 THEATRE RIGGING ACCESSORY SCHEDULE
SCALE: NO SCALE

GENERAL NOTES:

A. INSTALLATION SHALL CONFORM TO ALL APPLICABLE NEC, UL, STATE AND LOCAL CODES.
B. STRUCTURAL MEMBERS ARE SHOWN FOR DESIGN INTENT ONLY.
C. FIELD VERIFY ALL DIMENSIONS AND MOUNTING CONDITIONS PRIOR TO INSTALLATION.

KEYED NOTES:

1. NOT USED.

THIS DRAWING INDICATES THEATRE EQUIPMENT LAYOUT AND DESIGN OF THEATRE SYSTEMS. REVIEW BY A QUALIFIED ENGINEER IS NECESSARY TO ASSURE SAFETY AND CODE COMPLIANCE.

REFER TO E-SERIES DRAWINGS FOR ELECTRICAL FEEDS, DISCONNECT SWITCHES, CONDUIT, AND WIRE FOR ALL RIGGING EQUIPMENT. DIVISION 16 CONTRACTOR SHALL PROVIDE AND INSTALL ALL ELECTRICAL EQUIPMENT AND CONTROL WIRING INDICATED FOR A COMPLETE AND OPERABLE SYSTEM.

PRELIMINARY
NOT FOR CONSTRUCTION

THE SAENGER THEATRE RENEWAL PROJECT

142 North Rampart Street
New Orleans, LA

Client
Saenger Theatre Redevelopment Company
200 West Loop South, Suite 1040 Houston TX 77027

Architect
MARTINEZ+JOHNSON ARCHITECTURE
1412 Eye St., NW
Washington, DC 20005
202.333.4480

Structural Engineer
Shawn J. Franke, P.E.
549 Heimer Road San Antonio TX 78232
210.979.7900

Theatre Consultant
Schuler Shook
123 Third Street North #210
Minneapolis, MN 55401
612.339.5958

Acoustical Engineer
Akustiks
93 North Main Street South
Norwalk, CT 06584
202.299.1904

MEP Engineer
JBA Consulting Engineers, Inc.
3525 N. Causeway BLVD. Suite 500 Metairie, LA 70002
504.830.0139

Civil Engineer
Linfield, Hunter, & Junius, Inc.
3608 18th Street Suite 200
Metairie, LA 70002
504.833.5300

Architectural Historian
EHT Traceries, Inc.
1121 Fifth Street NW
Washington, DC 20001
202.393.1199

THEATRE PLANNERS
LIGHTING DESIGNERS
Schuler Shook

THESE DRAWINGS, SPECIFICATIONS, AND OTHER DOCUMENTS, (COLLECTIVELY, THE "DOCUMENTS") INCLUDING WITHOUT LIMITATION ELECTRONIC VERSIONS THEREOF AND THE IDEAS, DESIGNS, AND ARRANGEMENTS REPRESENTED THEREBY, ARE AND SHALL REMAIN THE PROPERTY OF MARTINEZ & JOHNSON ARCHITECTURE PC, AS DEFINED BY APPLICABLE CONTRACTUAL AGREEMENTS ("THE AGREEMENTS") AND AS PROTECTED BY THE COPYRIGHT STATUTES OF THE UNITED STATES. USE OF THE DOCUMENTS SHALL BE STRICTLY LIMITED TO THE PROJECT FOR WHICH THEY WERE PREPARED AND DEVELOPED ("THE PROJECT") PER THE TERMS OF THE AGREEMENTS. NO PART OF THE DOCUMENTS SHALL BE COPIED, DISCLOSED TO OTHERS, OR USED IN CONNECTION WITH ANY OTHER WORK OR PROJECT, OR BY ANY OTHER PERSONS FOR ANY PURPOSES, OTHER THAN THE COMPLETION OF THE PROJECT, WITHOUT THE SPECIFIC WRITTEN AUTHORIZATION OF MARTINEZ & JOHNSON ARCHITECTURE PC. THE DOWNLOADING, OPENING, OR VIEWING OF ELECTRONIC VERSIONS OF THE DOCUMENTS OR VISUAL CONTACT WITH ANY PRINTED FORM THEREOF SHALL CONSTITUTE CONCLUSIVE EVIDENCE OF ACCEPTANCE OF THESE RESTRICTIONS.

7502

DATE:	No.:	ISSUE:
02.19.10	1	PERMIT SET
04.02.10	2	GMP CONTRACT SET
11.11.10	-	CONTRACT SET

DATE:	No.:	REVISION:

SHEET TITLE:
THEATRE RIGGING ELEVATION, DETAILS AND ACCESSORY SCHEDULE

TR-3.07

© 2010 M+J