FILE NAME: J:\-- Foundations or Structural Only\108 Ebony Dr -- Tim Maki\Drawings\Current\S-3 -- 130 mph Exposure C.dwg PLOT DATE & TIME: Wednesday, February 24, 2021 8:52:06 AM

TABLE S3.7 - HEADER SPANS FOR INTERIOR LOAD-BEARING WALLS

HEADERS SUPPORTING	SIZE	DROPPED HEADER – BUILDING WIDTH (ft) 12	24	36	RAISED HEADER – BUILDING WIDTH (ft) 12	24	36
		MAXIMUM HEADER SPAN			MAXIMUM HEADER SPAN		
ONE FLOOR ONLY (SINGLE CENTER BEARING WALL)	(2) 2x4	4'-0"	2'-10"	2'-4"	4'-1"	2'-10"	2'-4"
	(2) 2x6	5'-11"	4'-3"	3'-5"	6'-1"	4'-4"	3'-6"
	(2) 2x8	7'-1"	5'-2"	4'-4"	7'-9"	5'-5"	4'-5"
	(2) 2x10	7'-11"	6'-0"	5'-0"	9'-2"	6'-6"	5'-3"
	(2) 2x12	8'-6"	6'-7"	5'-7"	10'-9"	7'-7"	6'-3"
	(3) 2x8	8'-5"	6'-4"	5'-3"	9'-8"	6'-10"	5'-7"
	(3) 2x10	9'-3"	7'-1"9'-10"	6'-0"	11'-5"	8'-1"	6'-7"
	(3) 2x12	9'-11"	7'-8"	6'-7"	13'-6"	9'-6"	7'-9"
	(4) 2x8	9'-5"	7'-2"	6'-0"	11'-2"	7'-11"	6'-5"
	(4) 2x10	10'-3"	7'-11"	6'-9"	13'-3"	9'-4"	7'-8"
	(4) 2x12	11'-0"	8'-7"	7'-4"	15'-7"	11'-0"	9'-0"

TABLE S3.8 - HEADER SPANS FOR EXTERIOR LOAD-BEARING WALLS RESISTING WIND LOADS EXP "C"

SIZE	120 MPH	130 MPH	140 MPH	150 MPH	160 MPH	170 MPH	180 MPH	195 MPH
(2) 2x4	5'-1"	4'-8"	4'-4"	4'-1"	3'-10"	3'-7"	3'-5"	3'-2"
(2) 2x6	6'-3"	5'-9"	5'-4"	5'-0"	4'-8"	4'-5"	4'-2"	3'-10"
(2) 2x8	6'-10"	6'-4"	5'-11"	5'-6"	5'-2"	4'-10"	4'-7"	4'-3"
(2) 2x10	7'-4"	6'-10"	6'-4"	5'-11"	5'-6"	5'-2"	4'-11"	4'-6"
(2) 2x12	7'-10"	7'-3"	6'-9"	6'-3"	5'-11"	5'-7"	5'-3"	4'-10"
(3) 2x8	8'-5"	7'-9"	7'-2"	6'-9"	6'-4"	5'-11"	5'-7"	5'-2"
(3) 2x10	9'-0"	8'-4"	7'-9"	7'-3"	6'-9"	6'-4"	6'-0"	5'-7"
(3) 2x12	9'-7"	8'-11"	8'-3"	7'-8"	7'-3"	6'-10"	6'-5"	5'-11"
(4) 2x8	9'-8"	9'-0"	8'-4"	7'-9"	7'-3"	6'-10"	6'-6"	6'-0"
(4) 2x10	10'-5"	9'-7"	8'-11"	8'-4"	7'-10"	7'-4"	6'-11"	6'-5"
(4) 2x12	11'-7"	11'-1"	10'-3"	9'-6"	8'-11"	8'-4"	7'-10"	6'-10"

TABLE S3.9 - SILL OR BOTTOM PLATE TO FOUNDATION CONNECTIONS RESISTING UPLIFT LOADS - 130 MPH WIND EXP "C"

BOTTOM PLATE TO FOUNDATION ANCHOR BOLT CONNECTION RESISTING	FOUNDATION SUPPORTING	MAXIMUM ANCHOR BOLT SPACING (INCHES) – 8' END ZONES	INTERIOR ZONES
UPLIFT LOADS	1 - 3 STORIES	34 INCHES ON CENTER	40 INCHES ON CENTER

NOTE: A MINIMUM OF ONE ANCHOR BOLT SHALL BE PROVIDED WITHIN 6 TO 12 INCHES OF EACH END OF EACH PLATE

TABLE S3.10 - BOTTOM PLATE TO FOUNDATION CONNECTIONS (ANCHOR BOLTS) RESISTING LATERAL & SHEAR LOADS - EXP "C"

BOTTOM PLATE TO FOUNDATION ANCHOR BOLT CONNECTION RESISTING	FOUNDATION SUPPORTING	MAXIMUM ANCHOR BOLT SPACING (INCHES) – 1/2" Φ ANCHOR BOLTS	5/8" Φ ANCHOR BOLTS
UPLIFT LOADS	1 STORY	31 INCHES ON CENTER	48 INCHES ON CENTER

TABLE S3.11 - FULL HEIGHT STUD REQUIREMENT FOR HEADERS OR WINDOW SILL PLATES IN EXTERIOR WALLS EXP "C"

HEADER SPAN (FEET)	WALL STUD SPACING (INCHES) – 12" O.C.	16" O.C.	24" O.C.
	NUMBER OF FULL HEIGHT STUD REQUIRED AT EACH END OF THE HEADER		
2	1	1	1
4	2	2	1
6	3	3	2
8	4	3	2
10	5	4	3
12	6	5	3
14	7	6	4
16	8	6	4

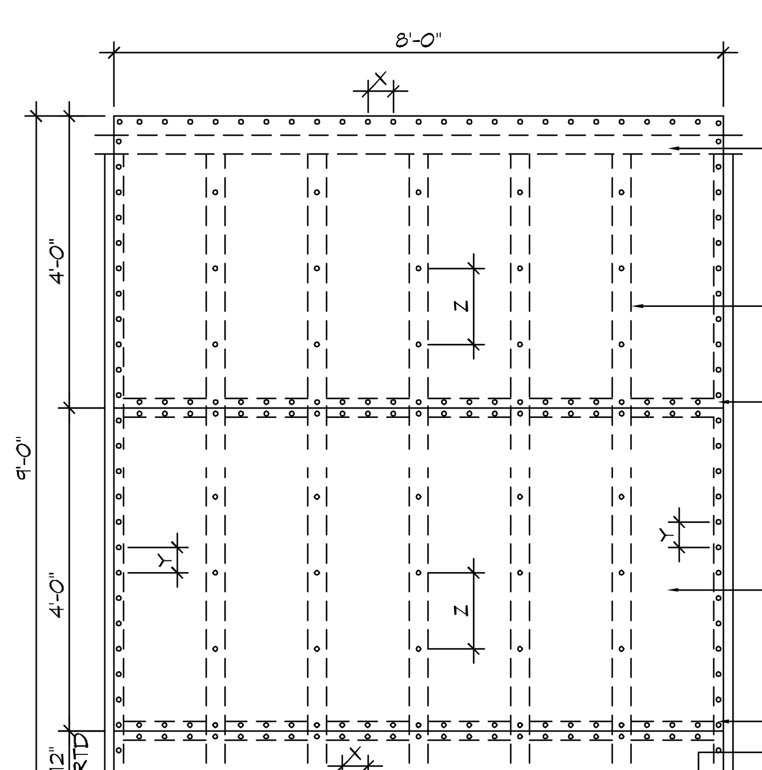

NAIL SPACING
X = 4" OC
Y = 4" OC
Z = 12" OC

X = PLATE EDGE NAIL SPACING
Y = LONG EDGE NAIL SPACING
Z = FIELD NAIL SPACING

(H) SHEAR WALL EXTERIOR SHEATHING NAILING PATTERN

TABLE S3.5 - JACK STUD REQ - INT LOADBEARING WALLS

HEADER SUPPORTING	HEADER SPAN (FT)	12 FEET 3"	4.5"	5"	6"	24 FEET 3"	4.5"	5"	6"	36 FEET 3"	4.5"	5"	6"
		ROOF SPAN (FEET) / HEADER WIDTH / NUMBER OF JACK STUDS REQUIRED AT EACH END OF THE HEADER											
ONE FLOOR ONLY (CENTER BEARING)	2	1	1	1	1	1	1	1	1	1	1	1	1
	4	1	1	1	1	1	1	1	1	1	1	1	1
	6	1	1	1	1	1	1	1	1	2	1	1	1
	8	1	1	1	1	2	1	1	1	2	2	2	1
	10	1	1	1	1	2	2	1	1	3	2	2	2
	12	1	1	1	1	2	2	2	1	3	2	2	2
	14	2	1	1	1	3	2	2	2	4	3	3	2
	16	2	1	1	1	3	2	2	2	4	3	3	2
TWO FLOORS (CENTER BEARING)	2	1	1	1	1	1	1	1	1	2	1	1	1
	4	1	1	1	1	2	1	1	1	3	2	2	2
	6	2	1	1	1	3	2	2	2	4	3	2	2
	8	2	2	1	1	3	2	2	2	5	3	3	3
	10	2	2	2	1	4	3	3	2	6	4	4	3
	12	3	2	2	2	5	3	3	3	7	5	4	4
	14	3	2	2	2	6	4	4	3	8	5	5	4
	16	4	3	2	2	6	4	4	3	9	6	6	5

HEADER WIDTH - 3" (2-2x), 4.5" (3-2x), 5", 6.5" (4-2x) EACH W/ 1/2" PLYWOOD SPACER BETWEEN

TABLE S3.6 - JACK STUD REQ - EXTERIOR LOADBEARING WALLS

HEADER SUPPORTING	HEADER SPAN (FT)	ROOF LIVE LOAD 20 PSF 3"	4.5"	5"	6"	GROUND SNOW LOAD 30 PSF 3"	4.5"	5"	6"
		NUMBER OF JACK STUDS REQUIRED							
ROOF AND CEILING	2	1	1	1	1	1	1	1	1
	4	1	1	1	1	1	1	1	1
	6	2	1	1	1	2	1	1	1
	8	2	2	2	1	2	2	2	1
	10	3	2	2	2	3	2	2	2
	12	3	2	2	2	3	2	2	2
	14	4	3	2	2	4	3	2	2
	16	4	3	3	2	4	3	3	2
ROOF, CEILING, AND ONE CENTER BEARING FLOOR	2	1	1	1	1	1	1	1	1
	4	2	1	1	1	2	1	1	1
	6	2	2	2	1	3	2	2	2
	8	3	2	2	2	3	2	2	2
	10	4	3	2	2	4	3	3	2
	12	4	3	3	2	5	3	3	3
	14	5	4	3	3	5	4	3	3
	16	6	4	4	3	6	4	4	3

HEADER WIDTH - 3" (2-2x), 4.5" (3-2x), 5", 6" (4-2x) EACH W/ 1/2" PLYWOOD SPACER BETWEEN

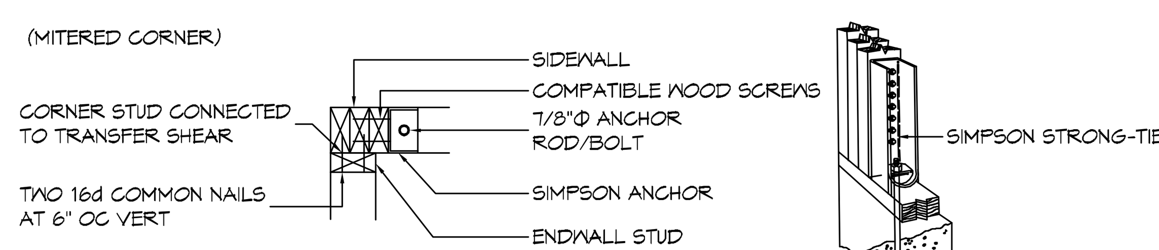

NOTE: HOLDDOWNS ARE REQUIRED AT THE END OF EACH SEGMENTED SHEARWALL SEGMENT OR AT THE EACH END OF A PERFORATED SHEARWALL. WHEN FULL HEIGHT SHEARWALL SEGMENTS MEET AT A CORNER, A SINGLE HOLDDOWN SHALL BE PERMITTED TO BE USED TO RESIST THE OVERTURNING FORCES IN BOTH DIRECTIONS WHEN THE CORNER FRAMING IN THE ADJOINING WALLS IS FASTENED TOGETHER TO TRANSFER THE UPLIFT LOAD.

(F) CORNER HOLDDOWN

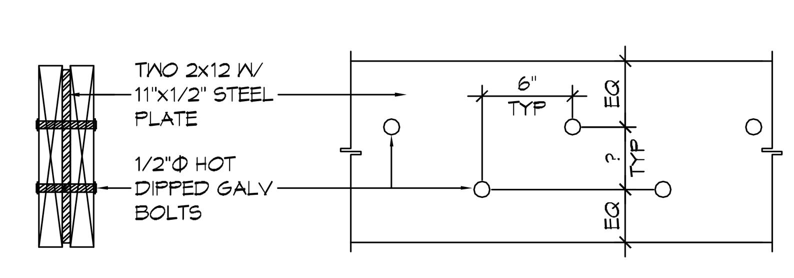

(N) FLITCH BEAM

(J) SIMPSON MSTAM36

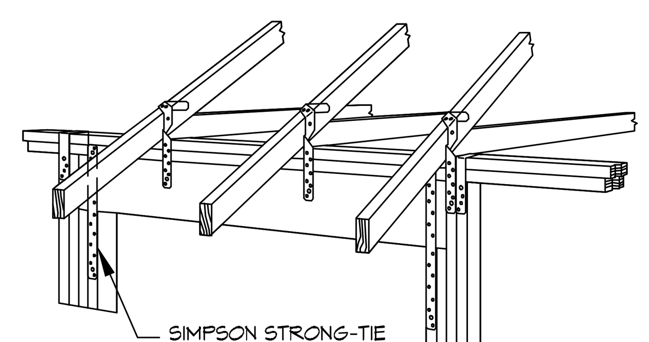

(M) DWG NAME

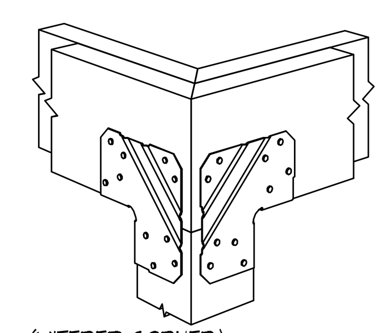

(L) POST TO BEAM

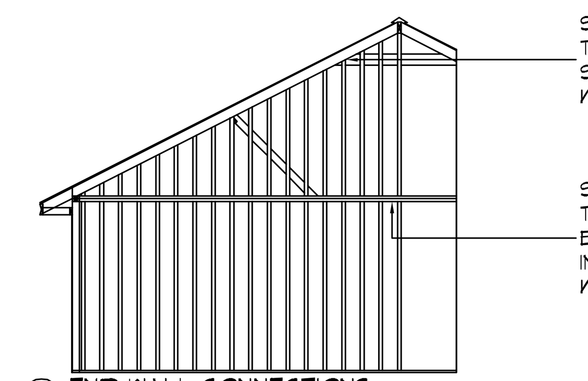

(K) END WALL CONNECTIONS

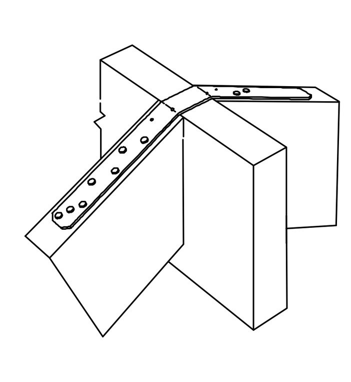

SIMPSON STRONG-TIE

AT ALL RIDGE CONNECTIONS

(G) RIDGE BEAM/BOARD

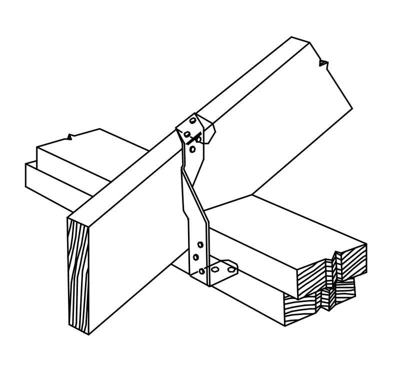

SIMPSON STRONG-TIE

(F) TOP PLATE TO RAFTER

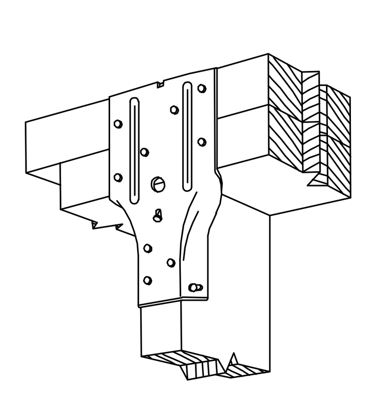

SIMPSON STRONG-TIE

(E) STUD TO TOP PLATE

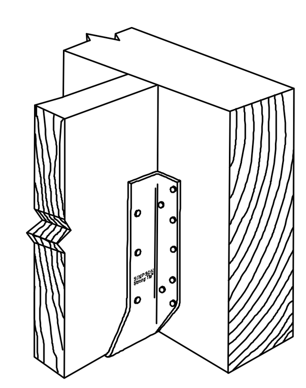

SIMPSON STRONG-TIE

(D) FLOOR JOIST

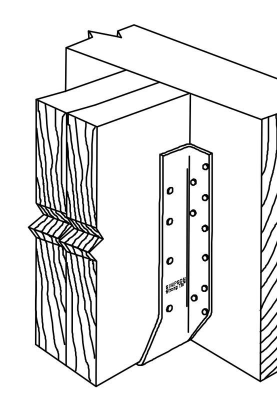

SIMPSON STRONG-TIE

(C) DBL FLOOR JOIST

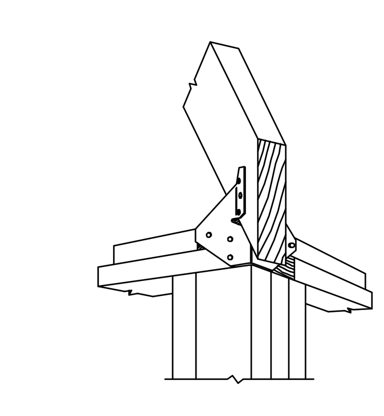

SIMPSON STRONG-TIE

(B) HIP RAFTER

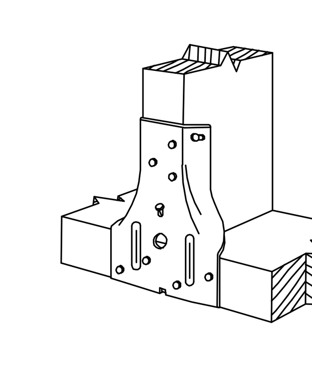

SIMPSON STRONG-TIE

(A) STUD TO SILL PLATE

1 (S3 | S3) TYPICAL CONNECTION DETAILS

SCALE: NTS

TABLE S3.3 - NAILING SCHEDULE

DESCRIPTION	NUMBER OF COMMON NAILS	NUMBER OF BOX NAILS	SPACING
WALL FRAMING			
TOP PLATE TO TOP PLATE (FACE NAILED)	2-16d	2-16d	PER FOOT
TOP PLATE AT INTERSECTION (FACE)	4-16d	5-16d	JOINTS - EACH SIDE
STUD TO STUD (FACE-NAILED)	2-16d	2-16d	24" o.c.
HEADER TO HEADER (FACE NAILED)	16d	16d	16" o.c. EDGES
TOP OR BOTTOM PLATE TO STUD (END)	SEE TABLE	SEE TABLE	PER STUD
BOTTOM PLATE TO FLOOR JOIST, BANDJOIST, END JOIST OR BLOCKING	2-16d	2-16d	PER FOOT
ROOF SHEATHING			
WOOD STRUCTURAL PANELS	8d	10d	SEE TABLE S3.1
DIAGONAL BOARD SHEATHING			
1"x6" OR 1"x8"	2-8d	2-10d	PER SUPPORT
1"x10" OR WIDER	3-8d	3-10d	PER SUPPORT

TABLE S3.4 - BUILDING ENVELOPE REQUIREMENTS

OPAQUE ELEMENTS		ASSEMBLY MAXIMUM	INSULATION MIN. R-VALUE
ROOFS	INSULATION ENTIRELY ABOVE DECK	U-0.048	R-20.0 c.i.
	METAL BUILDING	U-0.065	R-19
	ATTIC AND OTHER	U-0.027	R-38
WALLS, ABOVE GRADE	MASS	U-0.151 @	R-5.7 c.i. @
	METAL BUILDING	U-0.113	R-13.0
	STEEL-FRAMED	U-0.124	R-13.0
	WOOD-FRAMED AND OTHER	U-0.089	R-13.0
FLOORS	MASS	U-0.107	R6-3 c.i.
	STEEL JOIST	U-0.052	R-19.0
	WOOD FRAMED AND OTHER	U-0.051	R-19.0
SLAB-ON-GRADE	UN-HEATED	F-0.730	NR
OPAQUE DOORS	SWINGING	U-0.700	NR
	NON-SWINGING	U-1.450	NR

c.i. = CONTINUOUS INSULATION; NR = NO INSULATION REQUIREMENT
@ = EXCEPTION APPLIES

ROOF UNDERLAYMENT NOTES

1. FOR ROOF SLOPES FROM TWO UNITS VERTICAL IN 12 UNITS HORIZONTAL (17-PERCENT SLOPE), UP TO FOUR UNITS VERTICAL IN 12 UNITS HORIZONTAL (33-PERCENT SLOPE), UNDERLAYMENT SHALL BE TWO LAYERS APPLIED IN THE FOLLOWING MANNER:
   a. APPLY A 19 INCH STRIP OF UNDERLAYMENT FELT PARALLEL WITH AND STARTING AT THE EAVES, FASTENED SUFFICIENTLY TO HOLD IN PLACE. STARTING AT THE EAVE, APPLY 36 INCH WIDE SHEETS OF UNDERLAYMENT, OVERLAPPING SUCCESSIVE SHEETS 19 INCHES, AND FASTENED SUFFICIENTLY TO HOLD IN PLACE.
2. FOR ROOF SLOPES OF FOUR UNITS VERTICAL IN 12 UNITS HORIZONTAL (33-PERCENT SLOPE) OR GREATER, UNDERLAYMENT SHALL BE ONE LAYER APPLIED IN THE FOLLOWING MANNER:
   a. UNDERLAYMENT SHALL BE APPLIED SHINGLE FASHION, PARALLEL TO AND STARTING FROM THE EAVE AND LAPPED 2 INCHES, FASTENED SUFFICIENTLY TO HOLD IN PLACE. END LAPS SHALL BE OFFSET BY 6 FEET.

SHINGLE APPLICATION & FASTENING NOTES

1. ASPHALT STRIP SHINGLES SHALL HAVE A MINIMUM OF SIX FASTENERS PER SHINGLE WHERE THE ROOF IS IN ONE OF THE FOLLOWING CATEGORIES:
   a. THE BASIC WIND SPEED IS 110 MPH OR GREATER AND THE EAVE IS 20 FEET OR HIGHER ABOVE GRADE.
   b. THE BASIC WIND SPEED IS 120 MPH OR GREATER.
   c. SPECIAL WIND ZONES.

GENERAL UPLIFT CONNECTION NOTES

ROOF ASSEMBLY TO WALL ASSEMBLY:
UPLIFT CONNECTIONS SHALL BE FROM RAFTER OR TRUSS TO WALL STUD. WHEN RAFTERS OR TRUSSES ARE NOT LOCATED DIRECTLY ABOVE STUDS, RAFTERS SHALL BE ATTACHED TO THE WALL PLATE AND THE WALL TOP PLATE SHALL BE ATTACHED TO THE WALL STUD WITH UPLIFT CONNECTIONS. UPLIFT CONNECTIONS SHALL BE IN ACCORDANCE WITH TABLE S3.10.

WALL ASSEMBLY TO WALL ASSEMBLY:
STORY TO STORY UPLIFT CONNECTIONS FROM UPPER STORY WALL STUD TO LOWER STORY WALL STUD. WHEN UPPER STORY WALL STUDS ARE NOT LOCATED DIRECTLY ABOVE LOWER WALL STUDS, THE STUDS SHALL BE ATTACHED TO A COMMON MEMBER IN THE FLOOR ASSEMBLY BY UPLIFT CONNECTIONS. UPLIFT CONNECTIONS SHALL BE IN ACCORDANCE WITH TABLE S3.11.

WALL ASSEMBLY TO FOUNDATION:
FIRST FLOOR WALL STUDS SHALL BE CONNECTED TO THE FOUNDATION, SILL, PLATE, OR BOTTOM PLATE. A MINIMUM OF A 1-1/4" x 20 GA. ASTM A653 GRADE 33 STEEL STRAP SHALL BE NAILED TO THE WALL STUDS AND HAVE A MINIMUM EMBEDMENT OF 7 INCHES IN CONCRETE FOUNDATIONS AND SLABS-ON-GRADE, 15 INCHES IN MASONRY BLOCK FOUNDATIONS, OR BE LAPPED UNDER THE BOTTOM PLATE, 3 INCH SQUARE WASHERS SHALL BE USED ON THE ANCHOR BOLTS AND ANCHOR BOLT SPACINGS SHALL NOT EXCEED THE REQUIREMENTS. STEEL STRAPS EMBEDDED IN OR IN CONTACT WITH SLAB-ON-GRADE OR MASONRY BLOCK FOUNDATIONS SHALL BE HOT-DIPPED GALV. AFTER FABRICATION, OR MANUF. FROM G185 OR Z450 GALV. STL. CONNECTIONS SHALL BE IN ACCORDANCE WITH TABLE S3.12.

TABLE S3.1 - ROOF SHEATHING OR CLADDING REQUIREMENT - 130 MPH WIND LOAD EXP "C"

SHEATHING LOCATION	RAFTER / TRUSS SPACING	E	F
		MAX NAIL SPACING FOR 8d COMMON NAILS OR 10d BOX NAILS (INCHES OC)	
INTERIOR ZONE	12" OC	6	12
	16" OC	6	12
	24" OC	6	12
PERIMETER EDGE ZONE	12" OC	6	6
	16" OC	6	6
	24" OC	4	4

130 MPH WIND - EXPOSURE "C" TYPICAL
E = NAIL SPACING AT PANEL EDGES, INCHES.
F = NAIL SPACING AT INTERMEDIATE SUPPORTS IN THE PANEL FIELD, INCHES.

TABLE S3.2 - WALL SHEATHING OR CLADDING REQUIREMENT - 130 MPH WIND LOAD EXP "C"

SHEATHING LOCATION	STUD SPACING	E	F
		MAX NAIL SPACING FOR 8d COMMON NAILS OR 10d BOX NAILS (INCHES OC)	
INTERIOR ZONE	12" OC	6	12
	16" OC	6	12
	24" OC	6	12
PERIMETER EDGE ZONE	12" OC	6	12
	16" OC	6	12
	24" OC	6	6

130 MPH WIND - EXPOSURE "C" TYPICAL
E = NAIL SPACING AT PANEL EDGES, INCHES.
F = NAIL SPACING AT INTERMEDIATE SUPPORTS IN THE PANEL FIELD, INCHES.

DAMMON ENGINEERING, INC.
LOUISIANA & MISSISSIPPI
www.dammonengineering.com
info@dammonengineering.com
PH: 985.649.5832
Chief Engineer: Brian Mistich, PE
554 Old Spanish Trail
Slidell, LA 70458

REVISIONS
| DESCRIPTION | DATE

SEAL:

The above drawings and specifications, designs and arrangements represented thereby are and shall remain the property of Dammon Engineering, and no part thereof shall be copied, disclosed to others, or used in connection with any work or project other than the specific project for which the have been prepared and developed without written consent of Dammon Engineering. Visual contact with these drawings or specifications shall constitute conclusive evidence of acceptance of these restrictions.

2nd FLOOR ADDITION
TIM MAKI
108 EBONY DR.
SLIDELL LA.

JOB No: 2021-7 DATE: 02-23-2021
DRAWN BY: DD CHECKED BY: BAM

SHEET TITLE:
TYPICAL CONNECTION DETAILS, SCHEDULES, AND NOTES

DRAWING NUMBER:
S-3