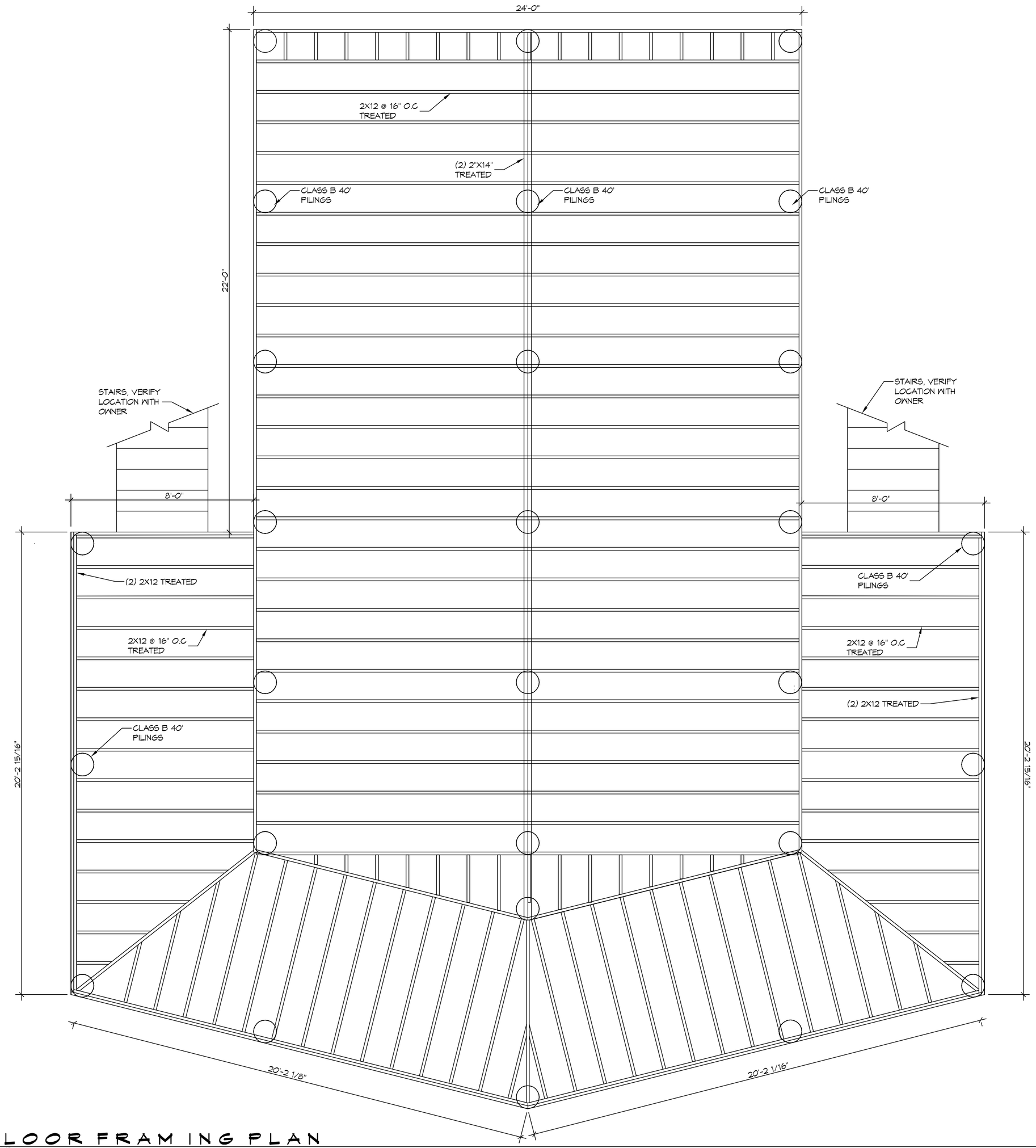

3 FLOOR FRAMING PLAN

SCALE: 3/8"= 1'-0"

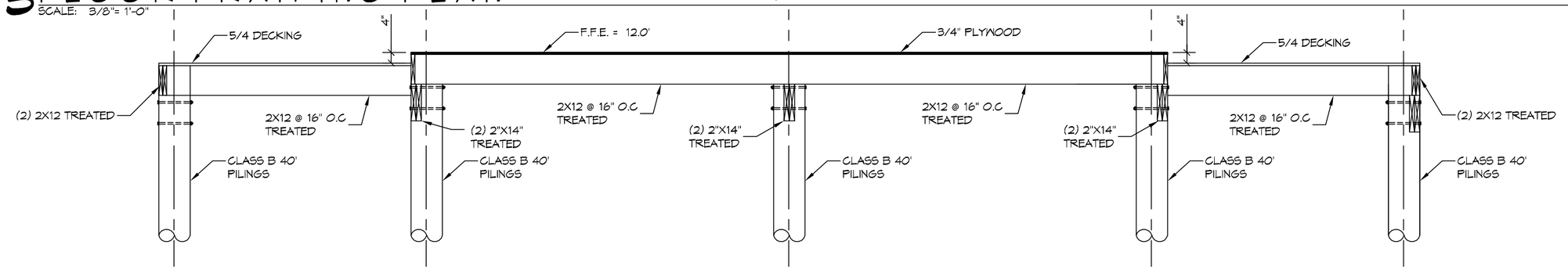

B SECTION

SCALE: 3/8"= 1'-0"

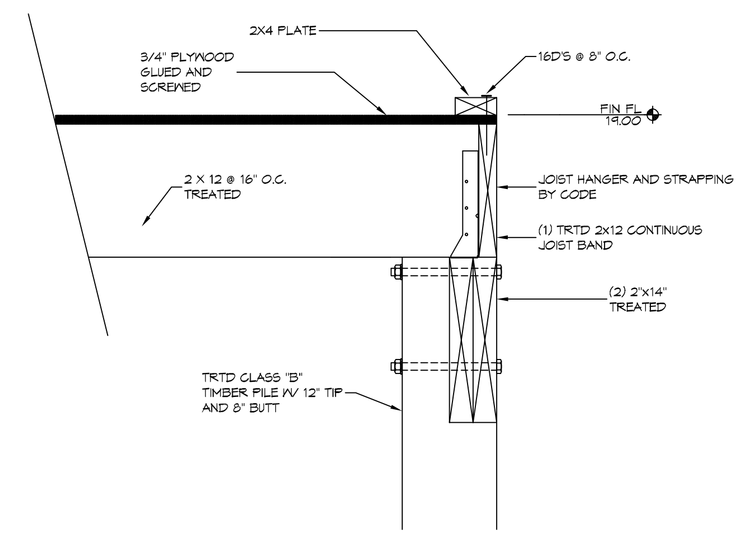

DETAIL

SCALE: 1/4" = 1'-0"

PERIMETER JOIST BAND

DAMMON ENGINEERING, INC.
LOUISIANA & MISSISSIPPI
www.dammonengineering.com
info@dammonengineering.com
PH: 985.649.5832
Chief Engineer: Brian Mistich, PE
554 Old Spanish Trail
Slidell, LA 70458

REVISIONS

#	DESCRIPTION	DATE

SEAL:

STATE OF LOUISIANA
BRIAN A. MISTICH
License No. 30187
PROFESSIONAL ENGINEER

STRUCTURAL DWGS

DENARD DUNHAM

LOT 20
SLACKDRIVE
LACOMBE, LA

JOB No:	2386	DATE:	06-26-2018
DRAWN BY:	CKD	CHECKED BY:	CKD

This drawing is an instrument of service, is the property of Dammon Engineering, and shall not be reused or copied in whole or in part without written permission of Dammon Engineering. Any reproduction of this drawing, in whole or in part, without written permission of Dammon Engineering, is a violation of the Louisiana Revised Statutes Title 37 Chapter 24 Section 3506 and 3507. Contact Dammon Engineering, Inc. at 985-649-5832 or info@dammonengineering.com for more information.

SHEET TITLE:
FLOOR
FRAMING PLAN

DRAWING NUMBER:

S102

SHEET No: 3 of 5

FILE NAME: J:\Y_Foundations & Structural Dwgs\2386 - Denard Dunham Lacombe\Current Drawings\S102 - Framing Plan.dwg PLOT DATE & TIME: Wednesday, June 26, 2018 3:23:14 PM