DESIGN CRITERIA

THE CONSTRUCTION FOR SAID RESIDENCE, WHERE BASIC WIND SPEED IS 140 MILES PER HOUR, WIND EXPOSURE ZONE C, IS DESIGNED IN ACCORDANCE WITH: AMERICAN FOREST AND PAPER ASSOCIATION (AF&PA) WOOD FRAME CONSTRUCTION MANUAL FOR ONE AND TWO FAMILY DWELLINGS (WFCM) 2001 EDITION AS WELL AS THE INTERNATIONAL RESIDENTIAL CODE (IRC) 2021 EDITION

PILING NOTES

1. PILES ARE TO BE 40 FT. IN LENGTH WITH A 8 INCH TIP AND 12" BUTT. DRIVEN TO REFUSAL.
2. ALL PILES SHALL BE PRESSURE-TREATED ROUND TIMBER PILES CONFORMING TO ASTM D25.
2. DESIGN LOAD = 5 TONS PER PILE.
3. NO FIELD SUPERVISION OR INSPECTION PROVIDED UNDER THIS SEAL UNLESS OTHERWSE NOTED.
4. PILE LAYOUT MAY BE MODIFIED DUE TO ACTUAL DRIVING CONDITIONS. ENGINEER TO BE NOTIFIED ON ANY MODIFICATION.
6. A PILE BLOW COUNT LOG OF ALL PILES IS TO BE SUBMITTED TO THE ENGINEER OF RECORD. FAILURE TO SUBMIT SAID LOG WILL RELEASE THE ENGINEER OF ALL RESPONSIBILITY.
7. CONTRACTOR IS RESPONSIBLE FOR THE COMPARISON & VERIFICATION OF PILE LAYOUT DIMENSIONS WITH MOST REGENT ARCHITECTURAL DRAWINGS, ASSURING THAT PILES DO FALL WITHIN LIMITS OF THE DESIGN
8. USE DROP HAMMER OR SINGLE ACTING AIR HAMMER DELIVERING 7,500 FT-LBS OF ENERGY PER BLOW. RAM WEIGHT OF DROP HAMMER SHALL NOT EXCEED 2,500 TO 3,000 LBS AND THE DROP SHOULD NOT EXCEED 3 FT., AT MINIMUM OF 25 BLOWS PER FOOT. IF THE DROP EXCEEDS 3 FT., CONTACT ENGINEER FOR INSTRUCTIONS.
9. BRACE ALL PILINGS AS NEEDED FOR SWAYING.
10. FIELD VERIFY DIMENSIONS AGAINST THE ARCHITECTURAL DRAWINGS

GENERAL NOTES

1. ALL LUMBER SHALL BE PRESSURE TREATED WITH A RETENTION OF .4 PER C.F.
2. ALL FASTENERS SHALL BE HOT DIPPED GALVANIZED (HDG) PER ASTM A153.
3. ALL CONNECTORS SHALL BE HDG PER ASTM A653, CLASS G185 SHEET WITH 1.85 OZ/SF ZINC COATING.

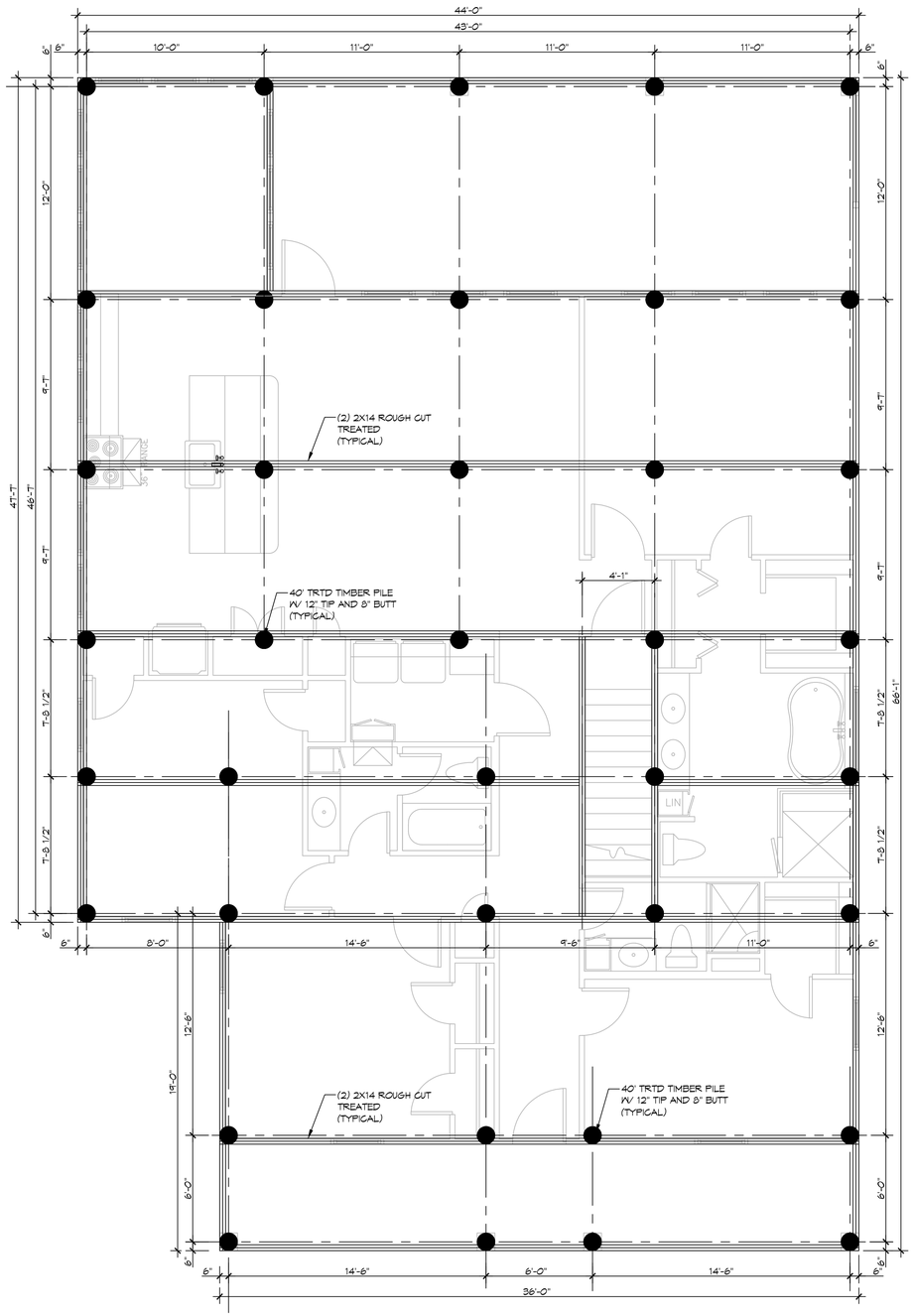

1 PILING PLAN
SCALE: 1/4"= 1'-0"

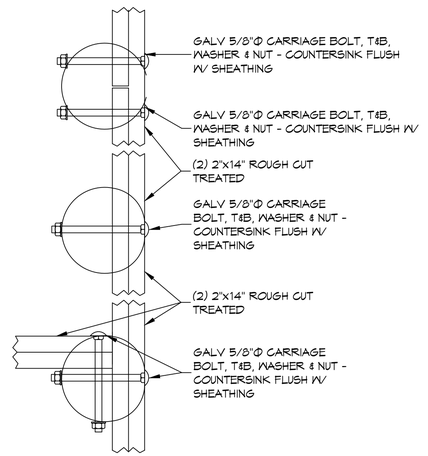

DETAIL
SCALE: 1-1/2" = 1'-0"
PERIMETER BAND

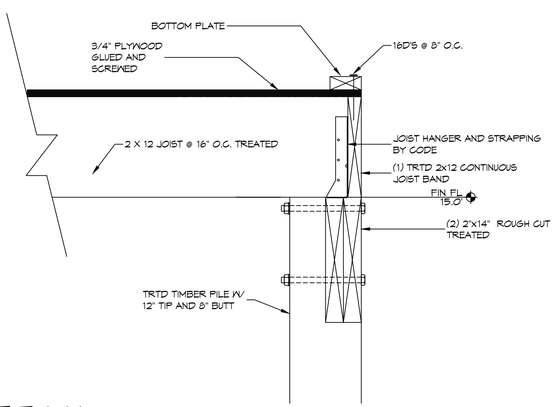

DETAIL
SCALE: 1-1/2" = 1'-0"
PERIMETER JOIST BAND

DAMMON ENGINEERING, INC.
LOUISIANA & MISSISSIPPI
www.dammonengineering.com
info@dammonengineering.com
PH: 985.649.5832
Chief Engineer: Brian Mistich, PE
564 Lobster Trail
Slidell, LA 70458

#	DESCRIPTION	DATE

REVISIONS

SEAL:

PILING PLAN

ANTHONY & AMELIE PINZA
34355 BAYOU LIBERTY ROAD
SLIDELL, LA 70460

JOB No: 2023 | DATE: 05-01-2023
DRAWN BY: CKD | CHECKED BY: BAM

THE IDEAS AND DESIGNS SHOWN ON THESE PLANS, SPECIFICATIONS, AND ANY PUBLICATION THEREOF ARE SPECIFICALLY DESIGNED FOR THE PROJECT SPECIFIED. THEY ARE NOT TO BE USED FOR ANY OTHER PROJECT OR ADDITIONS TO THIS PROJECT, EXCEPT BY WRITTEN AGREEMENT WITH THE ARCHITECT OF RECORD. THE ARCHITECT OR ENGINEER OF RECORD RETAINS ALL COPYRIGHTS AND OTHER PROPERTY RIGHTS IN THESE PLANS, SPECIFICATIONS, AND ANY PUBLICATION THEREOF, INCLUDING WITHOUT LIMITATION, THE RIGHT TO THE ARCHITECTURAL DESIGN DEPICTED IN SUCH PLANS, SPECIFICATIONS, OR PUBLICATION. ALL REPRODUCTIONS OF THESE PLANS, SPECIFICATIONS, OR ANY PUBLICATION THEREOF, INCLUDING WITHOUT LIMITATION, ARCHITECTURAL DESIGNS, INDICATIONS, DESCRIPTIONS, OR DEPICTIONS, MUST BEAR THE STATUTORY COPYRIGHT NOTICE.

SHEET TITLE:
PILING PLAN

DRAWING NUMBER:
S101

SHEET No: 1 of 1

FILE NAME: J:\C - Foundations w Structural Only\Anthony Pinza Bayou Liberty Road\Current Drawings\S101 - Piling Plan.dwg PLOT DATE & TIME: Monday, May 1, 2023 9:48:33 AM