NOTES

1) ALL LUMBER SHALL BE TREATED
2) DOUBLE UP FLOOR JOIST UNDER TUB AND INTERIOR LOAD BEARING WALLS.

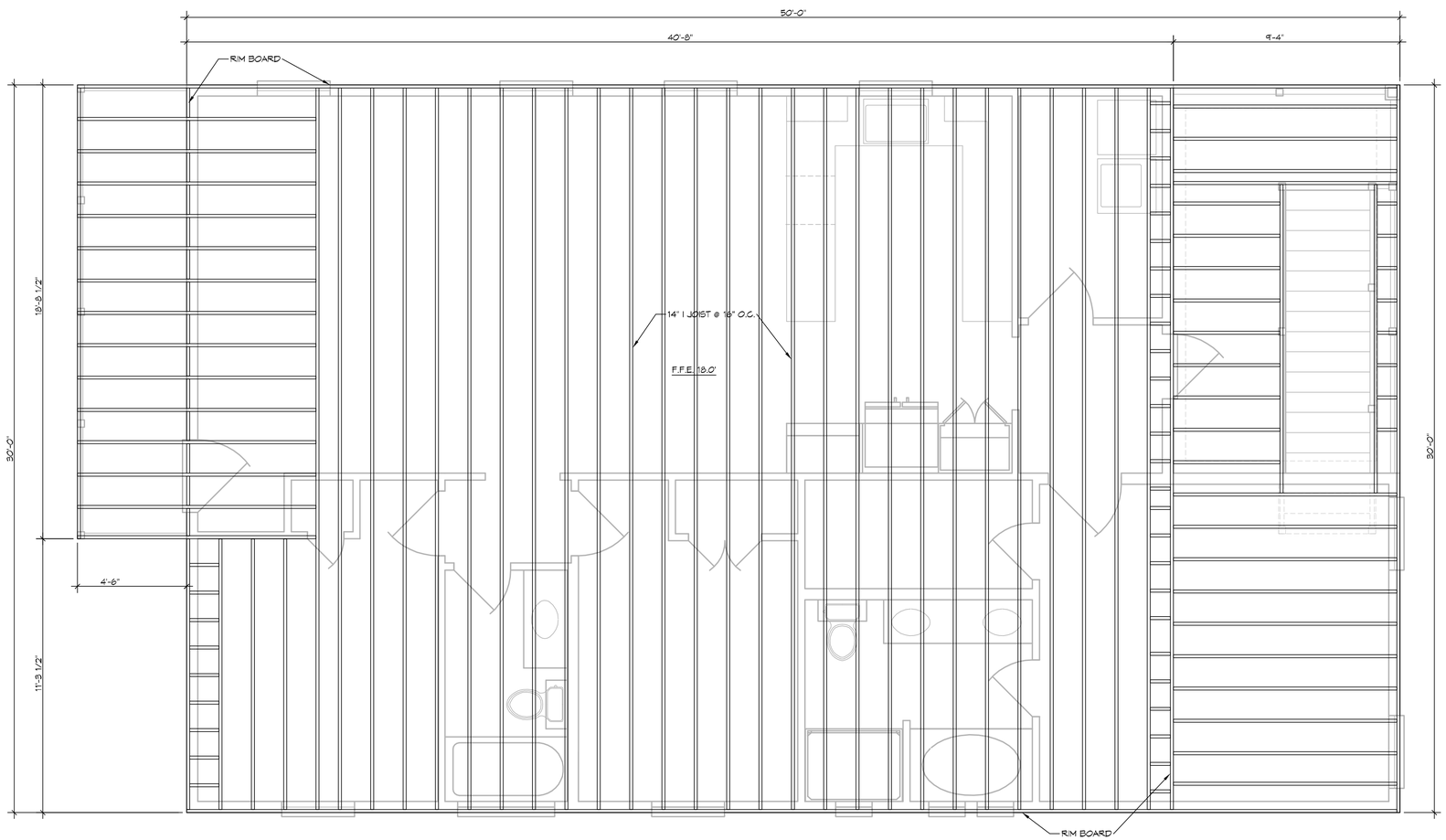

2 FLOOR FRAMING PLAN

SCALE: 3/8"= 1'-0"

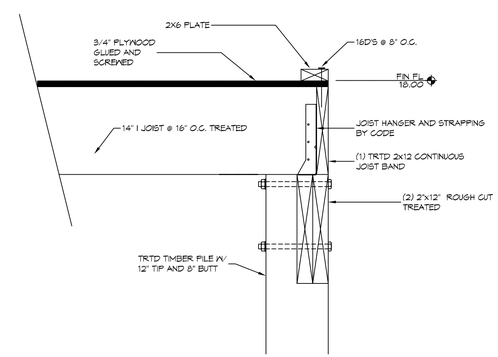

DETAIL

SCALE: 1/4" = 1'-0"

PERIMETER JOIST BAND

DAMMON ENGINEERING, INC.
LOUISIANA & MISSISSIPPI
www.dammonengineering.com
info@dammonengineering.com
PH: 985.649.5832
Chief Engineer: Brian Mistich, PE
5500 Highway 90 East
Suite 1
Sidell, LA 70458

REVISIONS

#	DESCRIPTION	DATE

SEAL:

STATE OF LOUISIANA
BRIAN A. MISTICH
License No. 30187
PROFESSIONAL ENGINEER

STRUCTURAL DWGS

JASON GAUBERT

144 TERRY DRIVE
SLIDELL, LA 70458

JOB No: 2021 DATE: 04-14-2021
DRAWN BY: CSD CHECKED BY: CSD

The design shown on this drawing is the property of Dammon Engineering, and may not be reproduced or used for any other purpose than that for which it was prepared without the written consent of Dammon Engineering. Dammon Engineering assumes no responsibility for any work done on the project by others, who have been provided with a copy of this drawing, and shall be held harmless by the owner of the project for any claims, losses and expenses, and shall indemnify Dammon Engineering for any claims, losses and expenses caused by the use of this drawing by others.

SHEET TITLE:
FLOOR FRAMING PLAN

DRAWING NUMBER:
S102

SHEET No: 2 of 2

FILE NAME: J:\- Foundations or Structural Only\Jason Gaubert 144 Terry Dr_Slab\Current Drawings\S102 - Framing Plan.dwg PLOT DATE & TIME: Monday, April 19, 2021, 3:50:09 PM