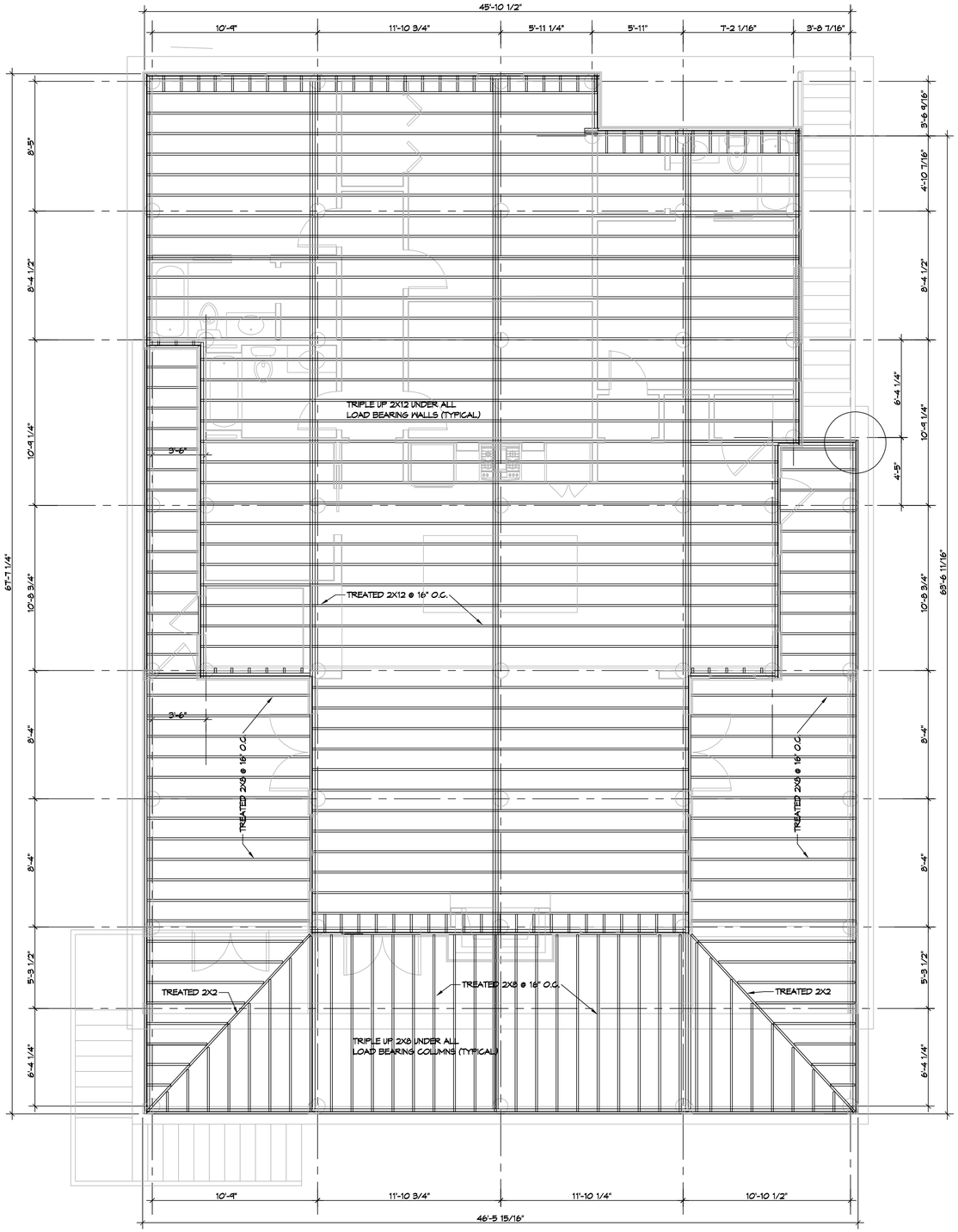

2 FLOOR FRAMING PLAN

SCALE: 1/4" = 1'-0"

GENERAL NOTES

1. ALL LUMBER SHALL BE PRESSURE TREATED WITH A RETENTION OF .4 PER C.F.
2. ALL FASTENERS SHALL BE HOT DIPPED GALVANIZED (HDG) PER ASTM A153.
3. ALL CONNECTORS SHALL BE HDG PER ASTM A653, CLASS G185 SHEET WITH 1.85 OZ/SF ZINC COATING.
4. TRIPLE UP FLOOR JOIST UNDER TUB AND INTERIOR LOAD BEARING WALLS.

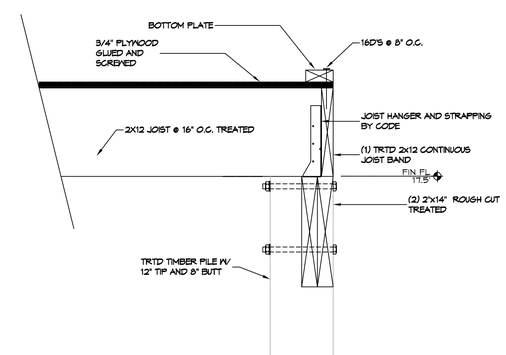

DETAIL

SCALE: 1-1/2" = 1'-0"

PERIMETER JOIST BAND

DAMMON ENGINEERING, INC.
LOUISIANA & MISSISSIPPI
www.dammonengineering.com
info@dammonengineering.com
PH: 985.649.5832

Chief Engineer: Brian Mistich, PE
5544 Jackson Trail
Slidell, LA 70458

REVISIONS

#	DESCRIPTION	DATE

SEAL:

STRUCTURAL DWGS

JIMI SMITH

LOT 1 SQUARE 1
22190 CHIEF MENTEUR HWY US 90
NEW ORLEANS LA. 70124

JOB No: 2021 | DATE: 03-15-2022

DRAWN BY: CKD | CHECKED BY: CKD

The data shown on this project drawings, specifications, and reports represent our opinion based on our knowledge, information and belief in accordance with generally accepted engineering practice. No other warranty is implied or intended. Dammon Engineering, Inc. assumes no responsibility for the use of this data for other purposes or projects for which the data was prepared and developed without written consent of Dammon Engineering, Inc. Dammon Engineering, Inc. assumes no responsibility for any alterations to this data.

SHEET TITLE:
FLOOR
FRAMING PLAN

DRAWING NUMBER:

S102

SHEET No: 2 of 3

FILE NAME: J:\- Foundations w/ Structural Only\Jimi Smith Chief Cooper\Current Drawings\S102 - Framing Plan.dwg PLOT DATE & TIME: Thursday, March 17, 2022 8:32:44 AM