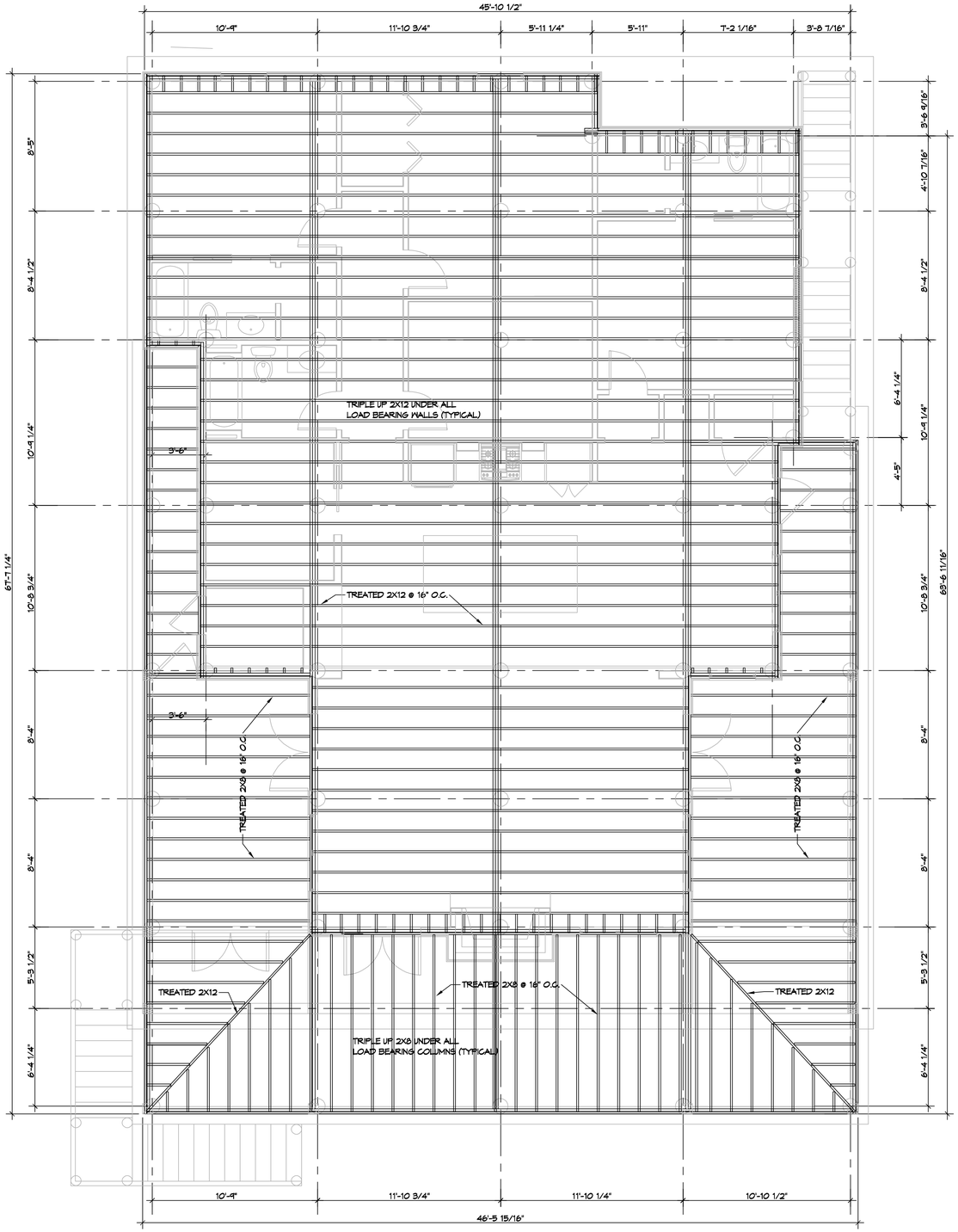

2 FLOOR FRAMING PLAN

SCALE: 1/4" = 1'-0"

GENERAL NOTES

1. ALL LUMBER SHALL BE PRESSURE TREATED WITH A RETENTION OF .4 PER C.F.
2. ALL FASTENERS SHALL BE HOT DIPPED GALVANIZED (HDG) PER ASTM A153.
3. ALL CONNECTORS SHALL BE HDG PER ASTM A653, CLASS G185 SHEET WITH 1.85 OZ/SF ZINC COATING.
4. TRIPLE UP FLOOR JOIST UNDER TUB AND INTERIOR LOAD BEARING WALLS.

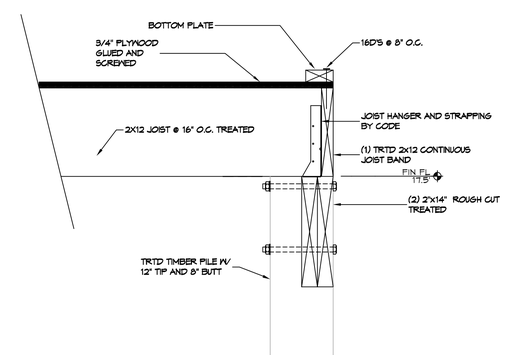

DETAIL

SCALE: 1-1/2" = 1'-0"

PERIMETER JOIST BAND

DAMMON ENGINEERING, INC.
LOUISIANA & MISSISSIPPI
www.dammonengineering.com
info@dammonengineering.com
PH: 985.649.5832

Chief Engineer: Brian Mistich, PE
5544 Crossing Trail
Slidell, LA 70458

REVISIONS

#	DESCRIPTION	DATE

SEAL:

STRUCTURAL DWGS

JIMI SMITH

LOT 1 SQUARE 1
22190 CHIEF MENTEUR HWY US 90
NEW ORLEANS LA. 70124

JOB No:	2021	DATE:	03-15-2022
DRAWN BY:	CKD	CHECKED BY:	CKD

The data shown on this project is the property of Dammon Engineering, and reproduction hereof will be strictly prohibited without written permission. Dammon Engineering shall not be responsible for any modifications made to this design without written approval from Dammon Engineering. Dammon Engineering shall not be responsible for any use of this design on any project other than that for which the work was prepared and developed without written consent of Dammon Engineering. Dammon Engineering shall not be responsible for any use of this design on any project for which the work was prepared and developed without written consent of Dammon Engineering.

SHEET TITLE:
FLOOR
FRAMING PLAN

DRAWING NUMBER:

S102

SHEET No: 2 of 3

FILE NAME: J:_Foundations w/ Structural Only\Jimi Smith Chef Sang\Current Drawings\S102 - Framing Plan.dwg PLOT DATE & TIME: Monday, March 21, 2022 3:53:55 AM