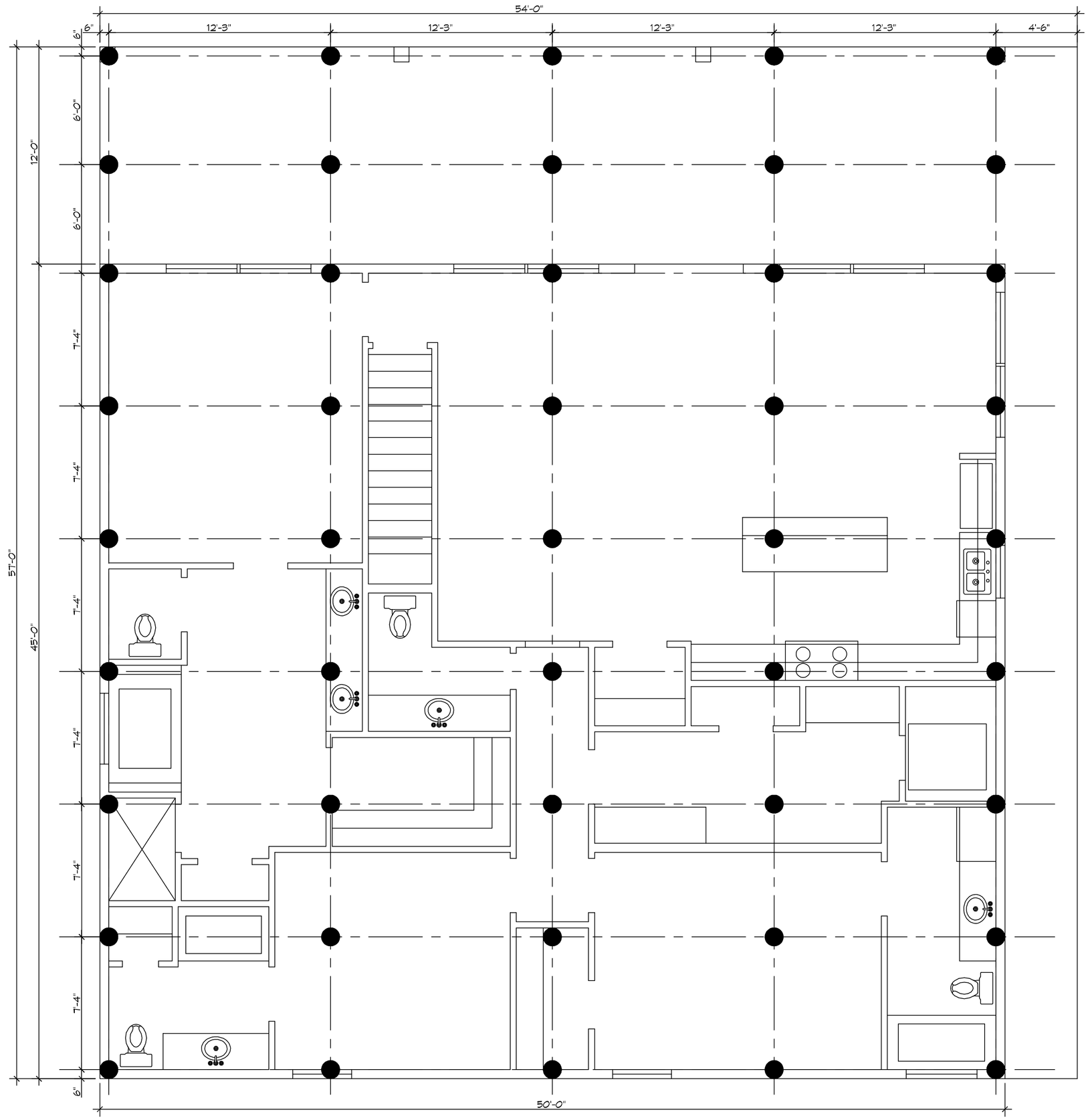

1 S101 | S101 PILING PLAN
SCALE: 1/4" = 1'-0"
PILING PLAN

PILING NOTES

1. PILES ARE TO BE CLASS B MODIFIED AND ALL PILES ARE TO BE 40 FT. IN LENGTH WITH A 8 INCH TIP AND 12" BUTT.
2. ALL PILES SHALL BE PRESSURE-TREATED ROUND TIMBER PILES CONFORMING TO ASTM D25.
2. DESIGN LOAD = 6 TONS PER PILE.
3. NO FIELD SUPERVISION OR INSPECTION PROVIDED UNDER THIS SEAL UNLESS OTHERWISE NOTED.
4. PILE LAYOUT MAY BE MODIFIED DUE TO ACTUAL DRIVING CONDITIONS. ENGINEER TO BE NOTIFIED ON ANY MODIFICATION.
6. A PILE BLOW COUNT LOG OF ALL PILES IS TO BE SUBMITTED TO THE ENGINEER OF RECORD. FAILURE TO SUBMIT SAID LOG WILL RELEASE THE ENGINEER OF ALL RESPONSIBILITY.
7. CONTRACTOR IS RESPONSIBLE FOR THE COMPARISON & VERIFICATION OF PILE LAYOUT DIMENSIONS WITH MOST RECENT ARCHITECTURAL DRAWINGS, ASSURING THAT PILES DO FALL WITHIN LIMITS OF THE DESIGN
8. USE DROP HAMMER OR SINGLE ACTING AIR HAMMER DELIVERING 7,500 FT-LBS OF ENERGY PER BLOW. RAM WEIGHT OF DROP HAMMER SHALL NOT EXCEED 2,500 TO 3,000 LBS AND THE DROP SHOULD NOT EXCEED 3 FT., AT MINIMUM OF 25 BLOWS PER FOOT. IF THE DROP EXCEEDS 3 FT., CONTACT ENGINEER FOR INSTRUCTIONS.
9. BRACE ALL PILINGS AS NEEDED FOR SWAYING.

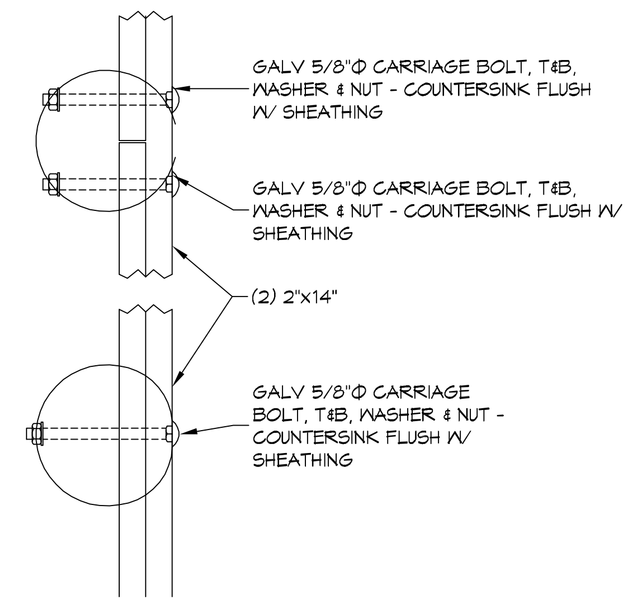

3 S101 | S101 DETAIL
SCALE: 1/4" = 1'-0"
PERIMETER BAND

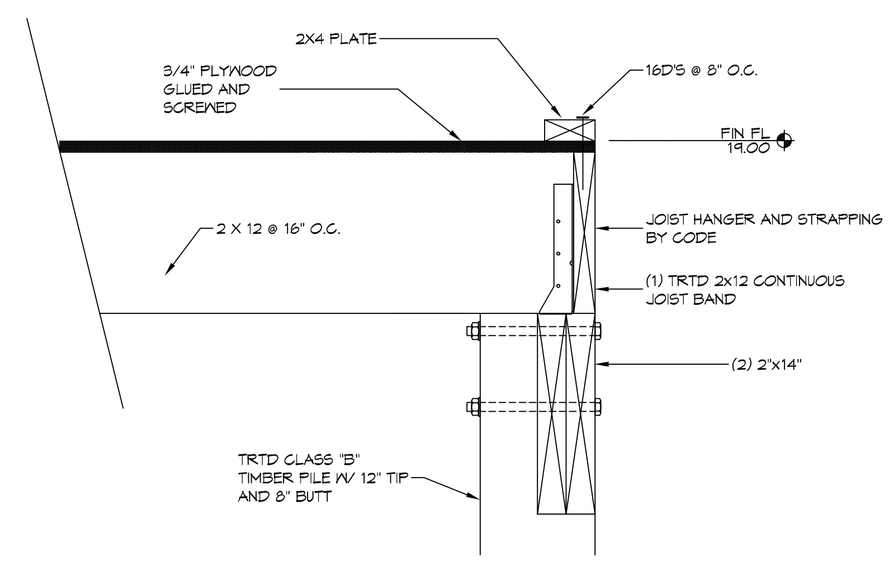

2 S101 | S101 DETAIL
SCALE: 1/4" = 1'-0"
PERIMETER JOIST BAND

DAMMON ENGINEERING, INC.
www.dammonengineering.com
info@dammonengineering.com
Fax: 985.641.5950
554 Old Spanish Trail
Slidell, LA 70458
PH: 985.649.3832

#	DESCRIPTION	DATE
	REVISIONS	

SEAL:
STATE OF LOUISIANA
BRIAN A. MISTICH
License No. 30187
PROFESSIONAL ENGINEER

PHYLLIS DRAUGHON
LOT 18, HWY 90
SLIDELL, LOUISIANA 70461

JOB No:	2017	DATE:	08-09-17
DRAWN BY:	CKD	CHECKED BY:	BAM

The above drawing are specifications, designs and arrangements represented, remain the property of Dammon Engineering, Inc. and shall not be loaned, copied or used for any purpose except those agreed to in writing by Dammon Engineering, Inc. Visual contact with these drawings or specifications shall constitute acceptance of the restriction stated herein.

SHEET TITLE:
PILING PLAN

DRAWING NUMBER:
S101

SHEET No: 1 of # 2

FILE NAME: J:_Foundations Only\Parks, Jamie, Nick, 90\Working drawings\S101-Foundation Plan.dwg PLOT DATE & TIME: Thursday, August 3, 2017 - 3:51:45 PM