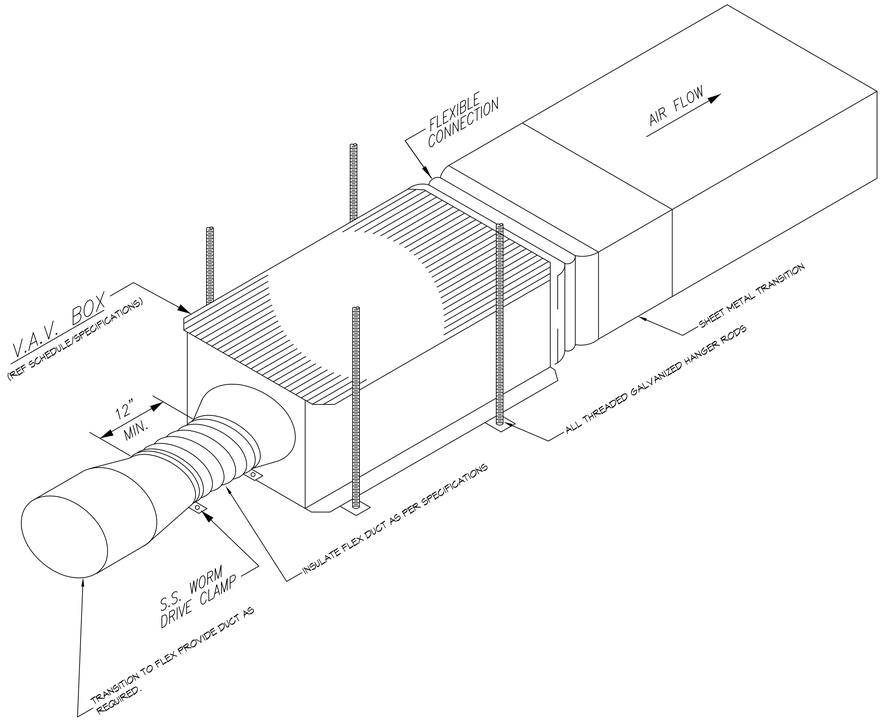

6 VARIABLE AIR VOLUME BOX
SCALE: NTS

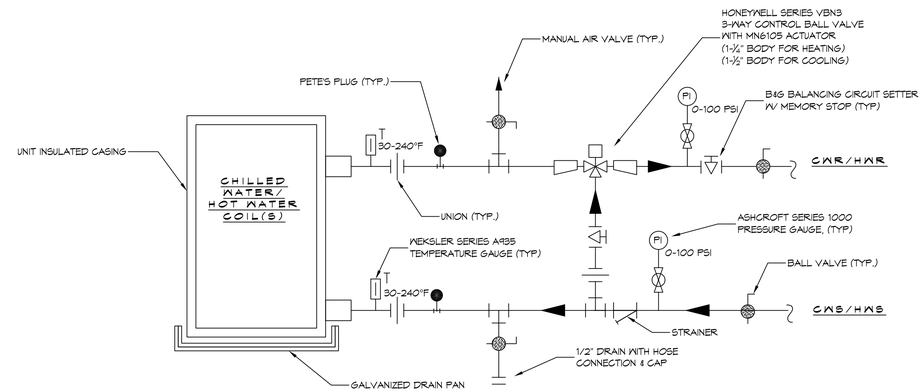

5 COIL PIPING SCHEMATIC
SCALE: NTS

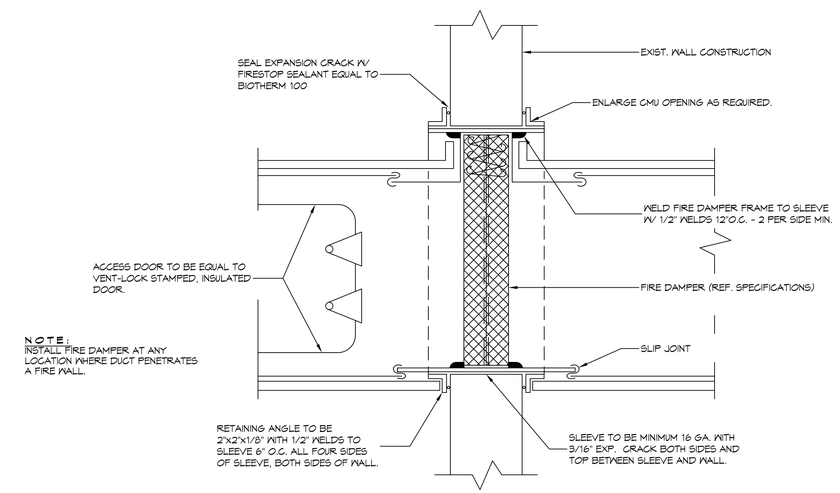

4 LOW VELOCITY DUCT-VERTICAL FIRE DAMPER
SCALE: NTS

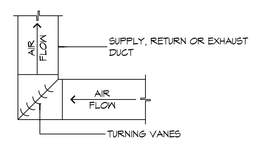

C SQUARE ELBOW

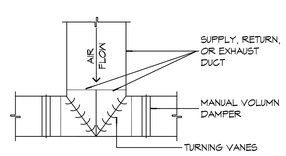

B DUCT SPLITTER

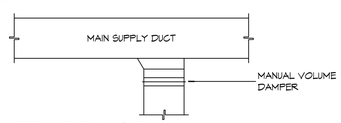

A SUPPLY DUCT TAKE-OFF

2 DETAILS
SCALE: NTS
TYPICAL DUCT CONNECTIONS

NOTES:
1. LENGTHS "X" AND "Y" SHALL BE DETERMINED BY AHU BASED ON TOTAL STATIC PRESSURE.
2. "X" AND "Y" SHALL BE EQUAL TO MINIMUM 1/2 TOTAL UNIT STATIC PRESSURE.
3. ALL CONDENSATE PIPING SHALL BE SLOPED AT 1/4" PER FOOT

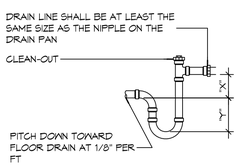

3 DETAIL
SCALE: NTS
CONDENSATE TRAP

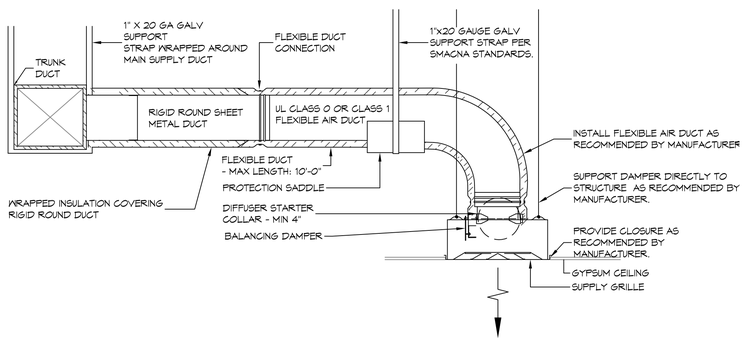

1 TYPICAL NON-RATED CEILING DIFFUSER
SCALE: NTS
TYPICAL SUPPLY AIR REGISTERS

FILE NAME: J:\-Government\2372 - Troop L State Police HQ Renovation\Drawings\Current Drawings\M103 - Details.dwg PLOT DATE & TIME: Friday, August 30, 2019 3:27:42 PM

DAMMON ENGINEERING, INC.
LOUISIANA & MISSISSIPPI
www.dammonengineering.com
info@dammonengineering.com
PH: 985.649.5832
Chief Engineer: Brian Mistich, PE
5544 Highway 190 East
Slidell, LA 70458

#	DESCRIPTION	DATE

REVISIONS

SEAL:

HVAC SYSTEM REPLACEMENT
PROJECT NO.: 01-107-06B-11, F.01003807

STATE POLICE TROOP L
HEADQUARTERS

2600 N CAUSEWAY BLVD, MANDEVILLE, LA 70471
STATE ID: 500814 SITE CODE: 1-52-004

JOB No:	2372	DATE:	7/25/2019
DRAWN BY:	RLD	CHECKED BY:	DD

The drawings and specifications contained herein are the property of Dammon Engineering, and no part thereof shall be used in any other construction or for any other purpose than that specifically indicated by the owner of the project for which they have been prepared and developed without written consent of Dammon Engineering. Visual contact with these documents shall constitute conclusive evidence of acceptance of these restrictions.

SHEET TITLE:
HVAC DETAILS

DRAWING NUMBER:
M103

SHEET No: 8 of 10