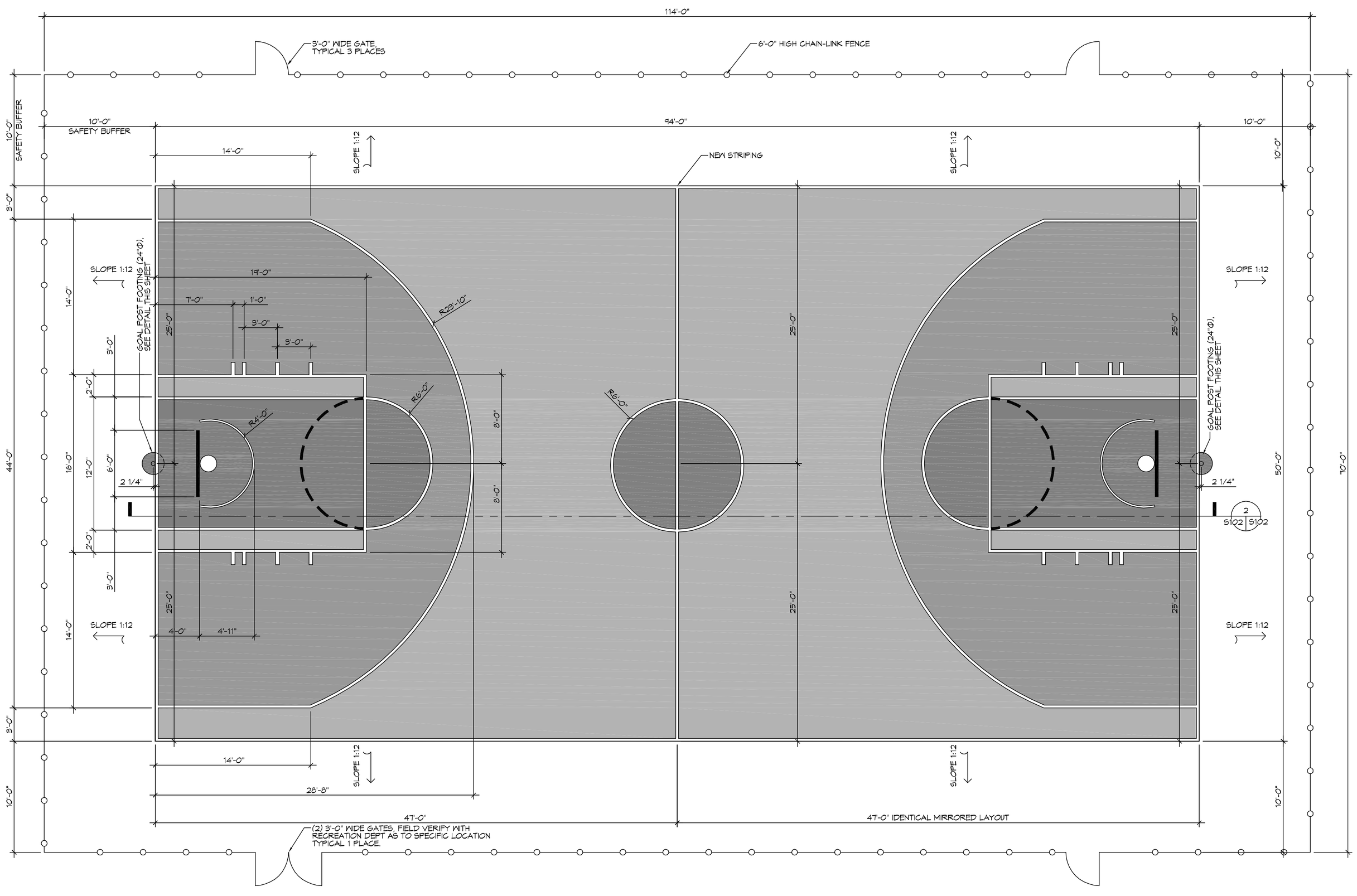

1 BASKETBALL COURT PLAN
SCALE: 3/16"=1'-0"
CONCRETE BACKETBALL COURT PLAN

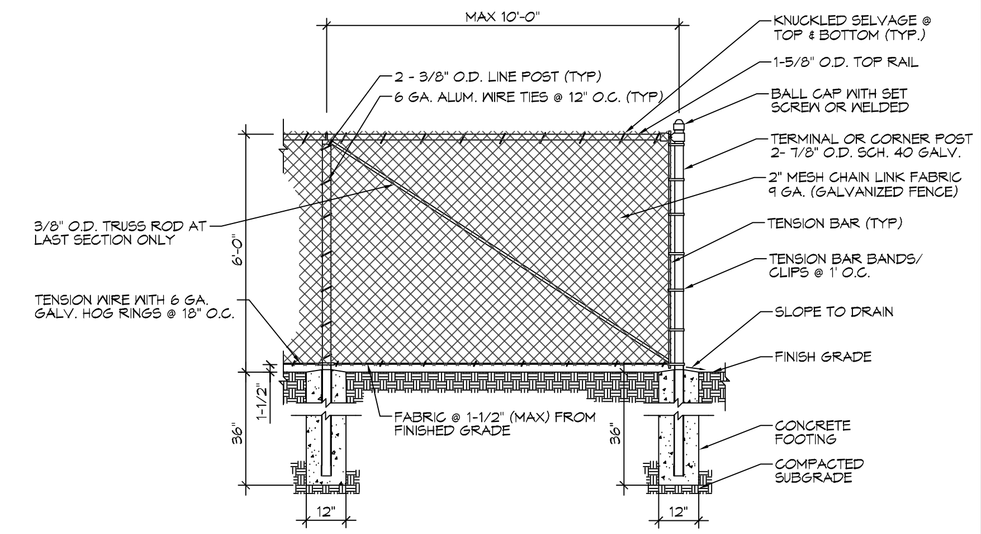

3 DETAIL
SCALE: 3/4"=1'-0"
FENCE POST FOOTING DETAIL

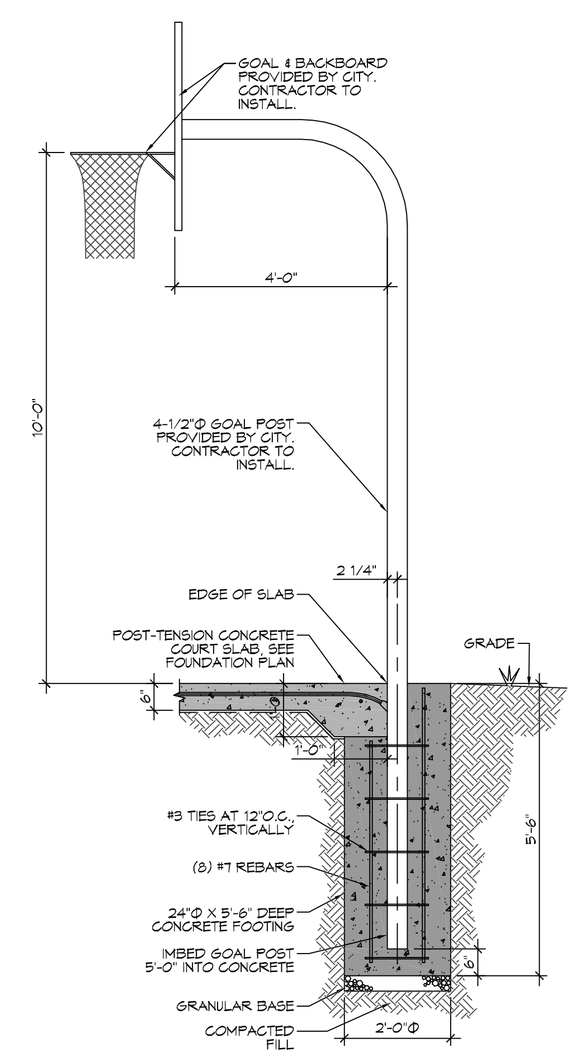

2 DETAIL
SCALE: 1/2"=1'-0"
GOAL POST FOOTING DETAIL

DAMMON ENGINEERING, INC.
LOUISIANA & MISSISSIPPI
www.dammonengineering.com
www.dammonengineers.com
PH: 985.649.5832 F: 985.641.5950
Chief Engineer: Brian Mistich, PE
1456 Cousin Street
Slidell, LA 70458

REVISIONS

#	DESCRIPTION	DATE

PRELIMINARY NOT FOR CONSTRUCTION

BASKETBALL COURT
POSSUM HOLLOW PARK
801 COUSIN STREET
SLIDELL, LA 70458

JOB No:	2271	DATE:	12/06/2016
DRAWN BY:	CAD/JTL	CHECKED BY:	BAM

These drawings are the property of Dammon Engineering, and shall remain the property of the firm. The reproduction, alteration, or use for any purpose other than those authorized by the firm is forbidden. Only those drawings bearing the seal of a registered professional engineer shall be used for construction purposes. No dimensions shall be scaled from these drawings.

SHEET TITLE:
BASKETBALL COURT PLAN

DRAWING NUMBER:
S101

SHEET No: 2 of 3

FILE NAME: J:\- Government\CITY OF SLIDELL\2271 - POSSUM HOLLOW PARK BASKETBALL COURT\S101-Basketball Court Plan.dwg PLOT DATE & TIME: Thursday, December 08, 2016 10:23:16 AM