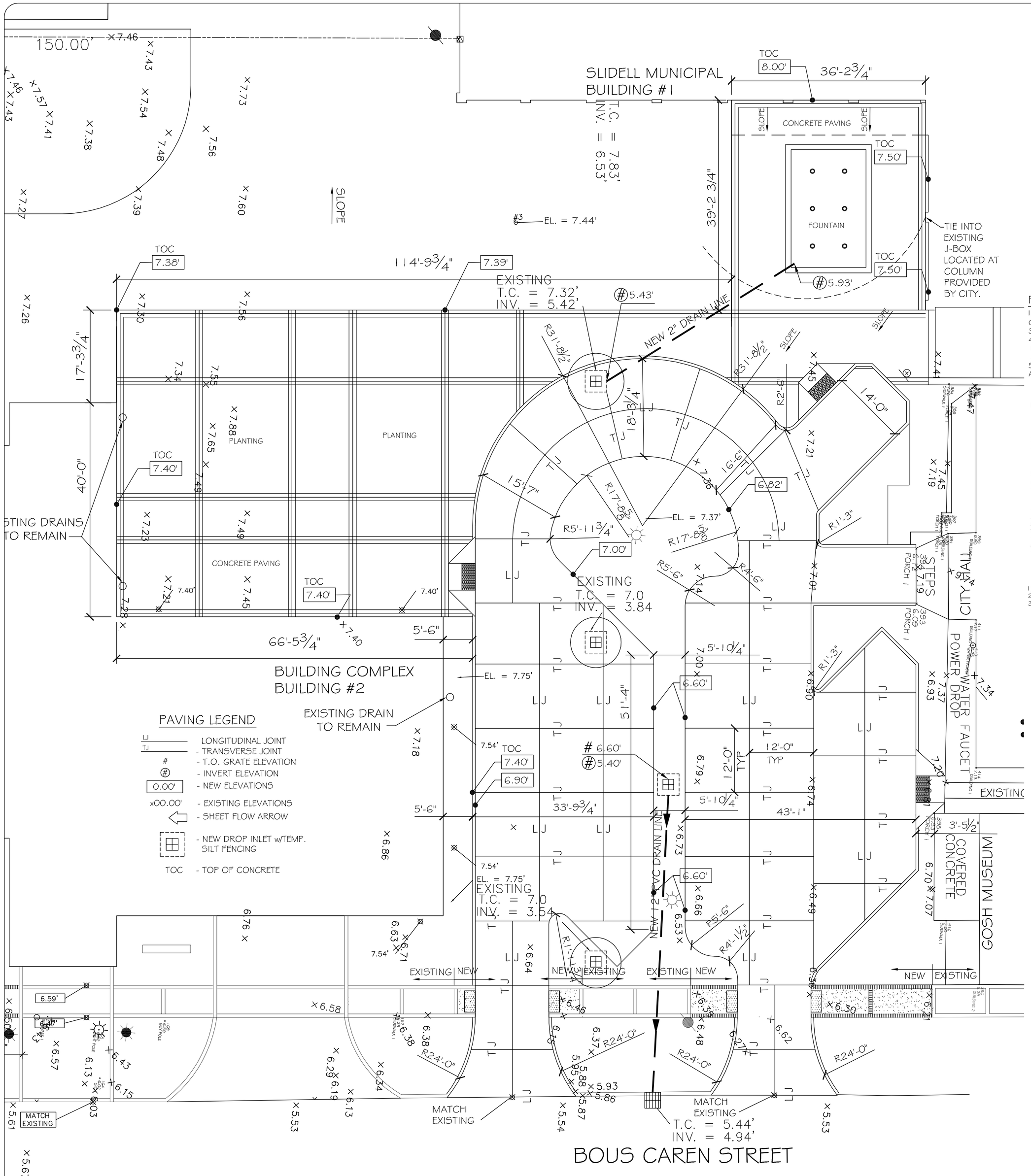

PAVING & DRAINAGE PLAN

SCALE: 1"=10'

PAVING LEGEND

- LJ — LONGITUDINAL JOINT
- TJ — TRANSVERSE JOINT
- # — T.O. GRATE ELEVATION
- (#) — INVERT ELEVATION
- 0.00' — NEW ELEVATIONS
- x00.00' — EXISTING ELEVATIONS
- SHEET FLOW ARROW
- NEW DROP INLET w/TEMP. SILT FENCING
- TOC — TOP OF CONCRETE

PARKING CONCRETE MIX DESIGN

MIX FOR ONE CUBIC YARD OF FIBER-REINFORCED CONCRETE

28 DAY STRENGTH	4000 PSI
CEMENT (ASTM C-150, TYPE I/II)	4.64 SACKS (436 LBS.)
FLY ASH (ASTM C-618)	1.16 SACKS (109 LBS.)
GRAVEL (ASTM C-33, GRADE A)	1775 LBS.
SAND (ASTM C-33)	1226 LBS.
WATER (POTABLE)	30 GALLONS (250 LBS.)
TYPE A WATER REDUCER (ASTM C-494	16.35 LBS.
AIR ENTRAINMENT SPECIFICATIONS	5% BY VOLUME, USE PER MANUFACTURERS
FIBER REINFORCEMENT	1.5 LBS/CY MICROFIBERS, AS SPECIFIED BELOW

FIBER REINFORCEMENT FOR ALL CONCRETE SIDEWALKS AND DRIVEWAYS SHALL BE MATRIX MONOFILAMENT MICROFIBER AS MANUFACTURED BY FRC INDUSTRIES OR APPROVED EQUAL, APPLIED THROUGHOUT THE CONCRETE MIXTURE. ALTERNATE PRODUCTS MUST BE PREAPPROVED BY THE CITY ENGINEER IN WRITING.CELLULOSE (TREATED OR UNTREATED), AR GLASS, NYLON AND POLYESTER FIBERS ARE SPECIFICALLY PROHIBITED FROM USE.

CONTRACTOR SHALL FURNISH ALL MATERIALS, LABOR, AND EQUIPMENT NEEDED TO CONSTRUCT HANDICAP RAMPS AT INTERSECTIONS, MEDIANS, OR AS DIRECTED BY THE CITY ENGINEER. THE CONCRETE USED TO CONSTRUCT THE RAMPS SHALL BE SIX (6") INCH THICK 4000-PSI AT 28 DAYS. WHERE NECESSARY OR AS DIRECTED BY THE CITY ENGINEER, EXISTING SIDEWALK SHALL BE REMOVED AND REPLACED WITH NEW PORTLAND CEMENT CONCRETE SIDEWALK AND TRUNCATED DOME TILE, AS STIPULATED ACCORDING TO AMERICAN DISABILITY ACT REQUIREMENT.
TRUNCATED DOME TILE SHALL BE MINIMUM 14-INCH THICK WITH EMBEDDED TRUNCATED DOMES, 3-INCHES ON CENTER THROUGH ENTIRE LENGTH OF TILE. TILE SURFACE SHALL BE COVERED WITH PROTECTIVE PLASTIC SHEETING. EACH HANDICAP RAMP SHALL CONSIST OF ONLY ONE TILE, WHICH SHALL BE ANCHORED INTO THE CONCRETE. THESE ARE A NO DIRECT PAY ITEM.

PAVING NOTES:

1) ALL NEW CONCRETE SHALL SHALL HAVE A MINIMUM COMPRESSIVE STRENGTH OF 4,000 PSI AT 28 DAYS AND A MINIMUM THICKNESS OF 6". CONCRETE MIX SHALL BE IN ACCORDANCE WITH THE LATEST REVISION OF ASTM C-150 TYPE 1.
3) ALL REINFORCING STEEL SHALL MEET ASTM-A615 (GRADE 60).
4) ALL REINFORCING STEEL SHALL BE SECURELY SUPPORTED TO PREVENT BOTH VERTICAL AND HORIZONTAL MOVEMENT DURING CONCRETE PLACEMENT. ALL LONGITUDINAL AND TRANSVERSE JOINTS SHALL BE LOCATED AND INSTALLED AS SHOWN ON THE PAVING PLAN AND IN ACCORDANCE WITH THE MANUFACTURERS RECOMMENDATIONS.
5) ALL SUB GRADE FILL SHALL BE SELECT GRANULAR MATERIAL COMPACTED TO 95 % STANDARD PROCTOR DENSITY IN A MAXIMUM OF 8" LIFTS. AND AS PER STRATUM ENGINEERING GEOTECHNAICAL ENGINEERING REPORT DATED 1-7-13 SHALL BE ADHERED TO.

SIDEWALK NOTES:

1) SIDEWALKS SHALL BE LOCATED AS NOTED. FIELD VERIFY WITH CITY ENGINEERING AND DAMMON ENGINEERING PRIOR TO FORMING. SCALING DIMENSION TO PRELIMINARY LOCATE SIDEWALKS IS PERMITTED.
2) ALL SIDEWALKS SHALL BE CONSTRUCTED OF PORTLAND CEMENT CONCRETE AND HAVE A MINIMUM THICKNESS OF 4".
3) SAND BASE COURSE (TYP.) SHALL HAVE A MINIMUM OF 6" THICK COMPACTED TO 95 % STANDARD PROCTOR.
3) PROVIDE SYNTHETIC FIBER REINFORCING IN ACCORDANCE WITH ASTM C 1116 IN ALL CONCRETE SIDEWALKS.
4) ALL EXPOSED AGGREGATE SIDEWALKS SHALL BE REINFORCED WITH 6X6 WELDED WIRE FABRIC, SUPPORTED SUCH THAT IT IS MID DEPTH IN THE FINISH SLAB. SOLID BRICK PAVERS SHALL BE ST. JOE OR APPROVED EQUAL. COLOR OF BRICK PAVERS AND EXPOSED AGGREGATE SURFACE SHALL MATCH EXISTING SIDEWALKS.
5) PROVIDE DETECTABLE WARNING SYSTEM (CAST IN PLACE) WHERE NEW SIDEWALKS TERMINATE INTO EXISTING STREETS AS NOTED.
6) ELEVATIONS SHOWN ARE M.S.L.
7) FIELD VERIFY ALL ELEVATIONS AND DRAINAGE SYSTEM PLACEMENT PRIOR TO START OF WORK.

TRAFFIC CONTROLS:

ANY WORK WITHIN THE ROADWAY OR ADJACENT TO THE ROADWAY CAUSING AN INTERFERENCE TO VEHICULAR TRAFFIC REQUIRES PRIOR APPROVAL FROM THE CITY OF SLIDELL, AND MUST CONFORM TO THE REQUIREMENTS SET FORTH BY THE MANUAL OF UNIFORM TRAFFIC CONTROL DEVICES. THE CONTRACTOR MUST FURNISH ALL NECESSARY TRAFFIC SIGNS AND/OR BARRICADES AND MAINTAIN THEM DURING CONSTRUCTION ACTIVITY.

DRAINAGE NOTES:

1) POND DRAIN PIPE & FITTINGS SHALL BE POLYVINYL CHLORIDE PLASTIC PIPE, MEETING CLASS 100 C-900 PVC.
2) ELEVATIONS SHOWN ARE M.S.L.
3) FIELD VERIFY ALL ELEVATIONS AND DRAINAGE SYSTEM PLACEMENT PRIOR TO START OF WORK.

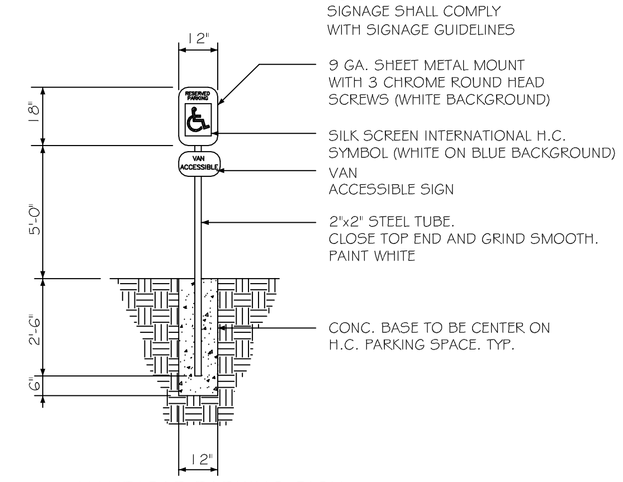

HANDICAP PARKING SIGN

N. T. S.

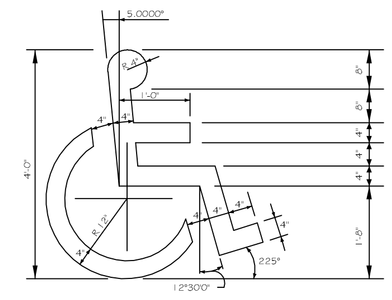

HANDICAP SYMBOL DETAIL

N. T. S.

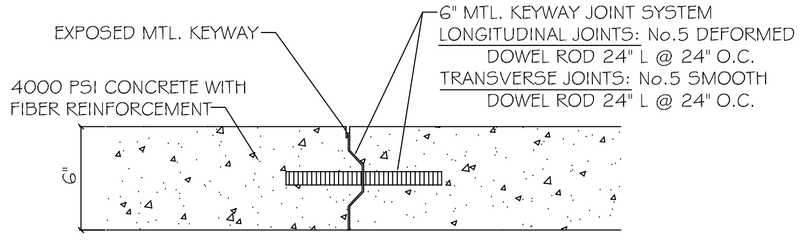

PAVEMENT JOINT DETAIL

N.T.S.

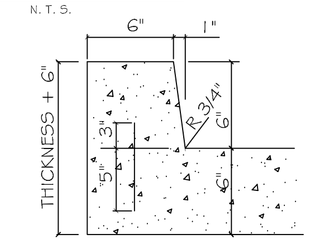

6" BARRIER CONCRETE CURB

N.T.S.

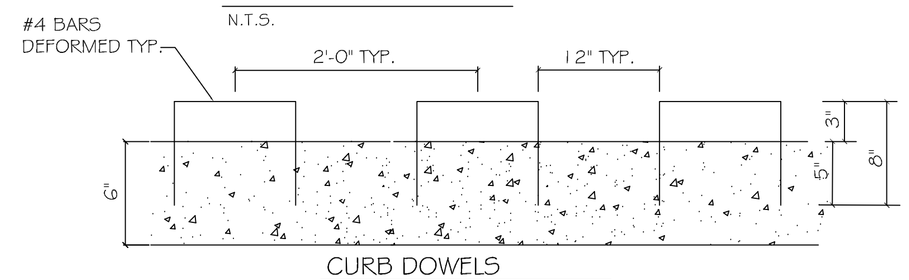

CURB DOWELS

N.T.S.

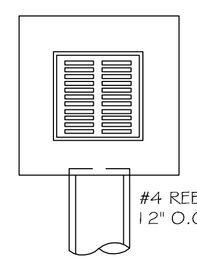

TYPICAL DROP INLET

NTS

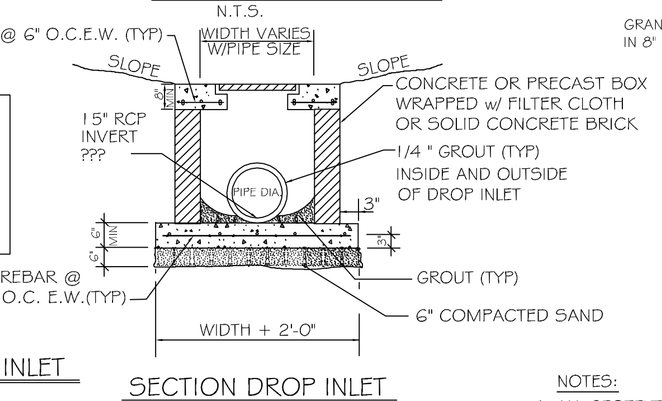

SECTION DROP INLET

NTS

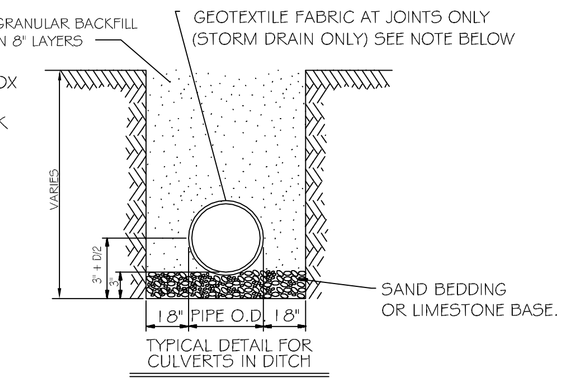

TYPICAL DETAIL FOR CULVERTS IN DITCH

N.T.S.

NOTES:

1. ALL GEOTEXTILE FABRIC TO BE 3'-0" WIDE AND TO OVERLAP NO LESS THAN 1/2 OF PIPE DIAMETER. COST OF FABRIC IS TO BE ABSORBED IN THE UNIT PRICE OF DRAIN PIPE AND SHALL NOT BE MEASURED FOR SEPERATE PAYMENT.
2. ADDITIONAL BEDDING MATERIAL MAY BE REQUIRED AS DIRECTED BY THE ENGINEER.
3. TIMBER PLANKING UNDER CULVERTS MAY BE REQUIRED BY ENGINEER.

DAMMON ENGINEERING, INC.
Architects & Engineers
CHIEF ENGINEER: EMMETT DAMMON, P.E.
CHIEF ARCHITECT: KEVIN KINCHEN
1454 OLD TRACE TRAIL
SLIDELL, LA 70458
dammoneng@bellsouth.net
PHONE: 985-641-5950
FAX: 985-641-5950

CITY HALL PARKING LOT & COURTYARD

BOUS CAREN STREET
SLIDELL, LA

JOB No:

DATE: 01-17-2013

DRAWN BY: JTL

CHECKED BY:

The above drawings and specifications, designs and arrangements represented thereby are and shall remain the property of Dammon Engineering, Inc. and no part thereof shall be copied, disclosed to others, or used in connection with any work or project other than the specific project for which the said firm of Dammon Engineering, Inc. has been retained. Visual contact with these drawings and specifications shall constitute prima facie evidence of acceptance of these restrictions.

REVISIONS

#	DESCRIPTION	DATE

PAVING & DRAINAGE PLAN

SHEET No: C2 OF