SEE DRAWING E4-P
IN ALTERNATE BID PACKAGE
FOR ALTERNATE HVAC SYSTEM
(ALTERNATE BID #2)

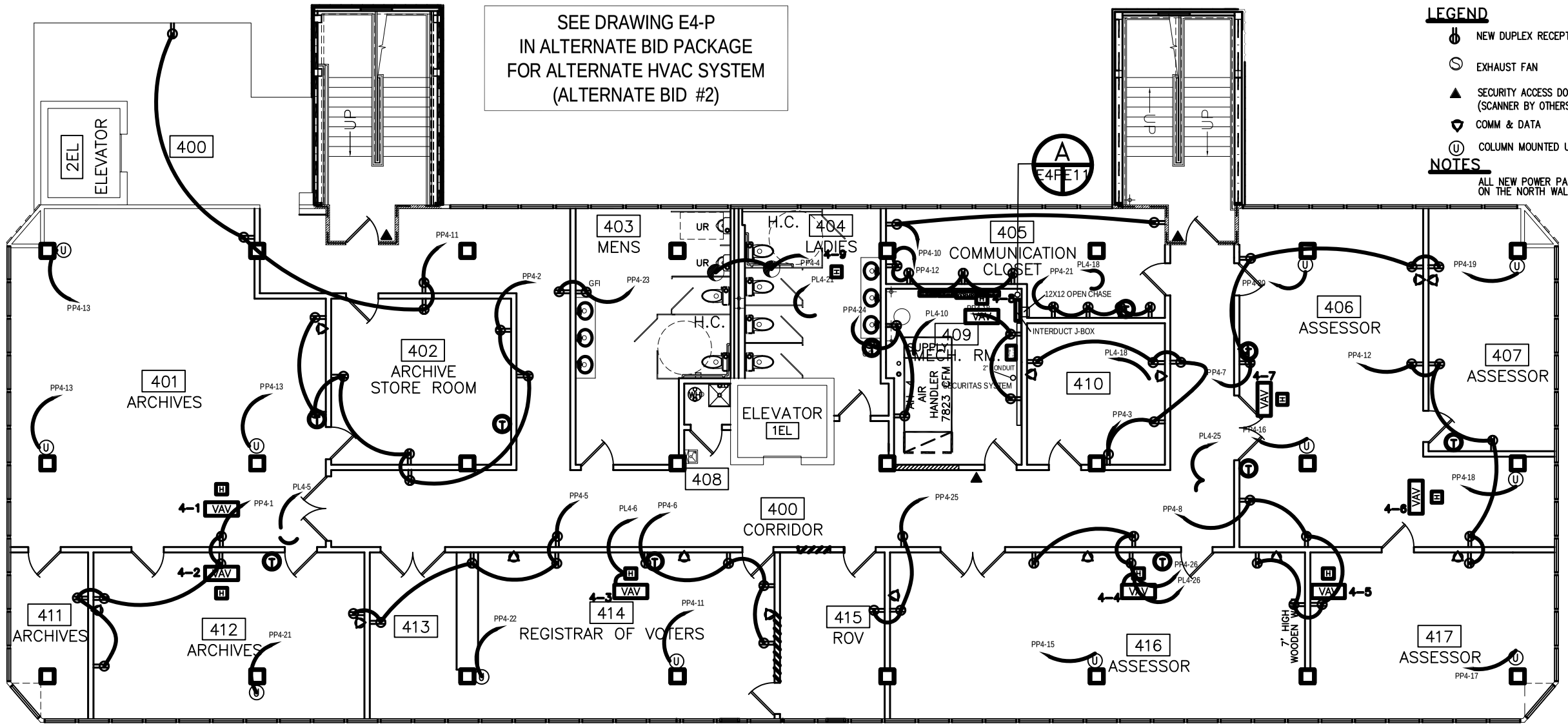

LEGEND

- NEW DUPLEX RECEPTACLE
- EXHAUST FAN
- SECURITY ACCESS DOOR (SCANNER BY OTHERS)
- COMM & DATA
- COLUMN MOUNTED UTLILITY

NOTES

ALL NEW POWER PANELS ARE TO BE MOUNTED ON THE NORTH WALL OF THE MECHANICAL ROOMS

FOURTH FLOOR POWER PLAN

SCALE: 3/16" = 1'-0"

ACCESS CONTROL
SINGLE DOOR WITH CARD READER,
MAGNETIC LOCK, REX, JUNCTION
BOX,DOOR CONTACT

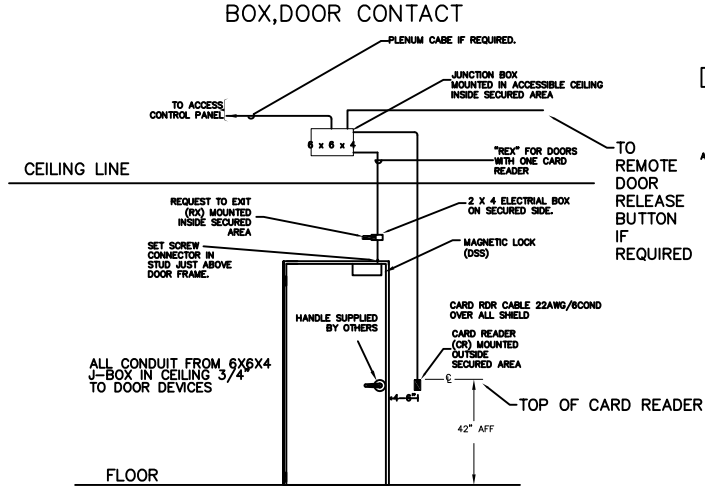

CONDUIT DOOR LAYOUT SINGLE DOOR MAG LOCK DWG

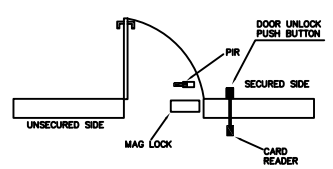

ACCESS CTRL CONDUIT LAYOUT SINGLE DOOR MAG.DWG

ALL CONDUIT IS 3/4 INCH EMT.

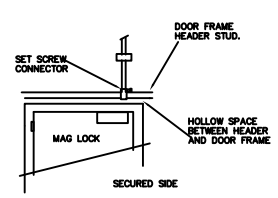

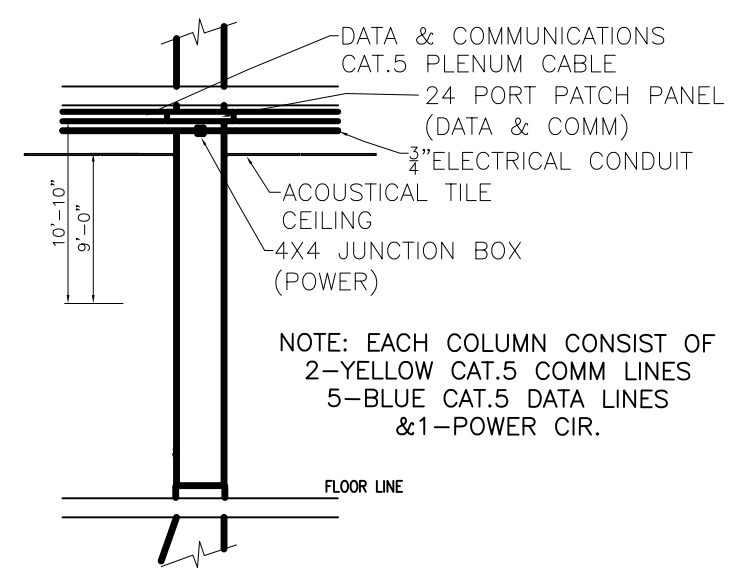

NOTE: EACH COLUMN CONSIST OF
2-YELLOW CAT.5 COMM LINES
5-BLUE CAT.5 DATA LINES
&1-POWER CIR.

COLUMN MOUNTED UTILITY DETAIL

SCALE: NTS

REVISED: 01/23/07

4TH FLOOR POWER PLAN

ST. TAMMANY PARISH ADMIN. COMPLEX
OLD SPANISH TRAIL
SLIDELL, LOUISIANA

RENOVATE OFFICE BUILDING

DAMMON ENGINEERING, INC.
1095 FLORIDA AVENUE 985-649-5832 SLIDELL, LA. 70458
DAMMONENGINEERING.COM

SCALE:AS NOTED
FILE:
JOB NO. 1729
DATE:1-8-07
SHEET
E4P
OF