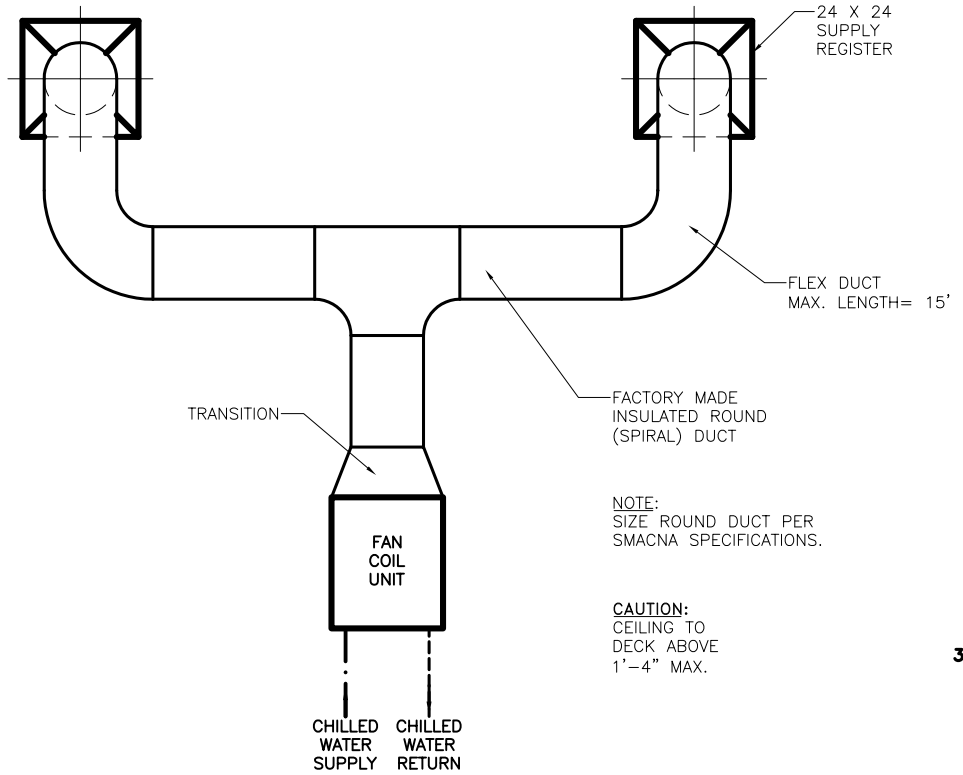

NOTE:
SIZE ROUND DUCT PER SMACNA SPECIFICATIONS.

CAUTION:
CEILING TO DECK ABOVE 1'-4" MAX.

TYPICAL ROOM DUCT

N. T. S.

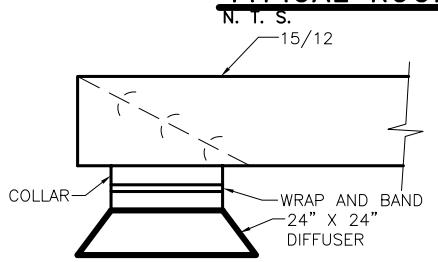

SECTION A M9 M9
SCALE: 1" = 1'-0"

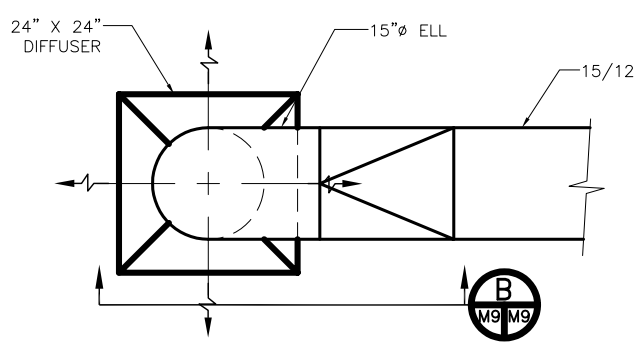

ALTERNATE DESIGN DUCT

SCALE: 1" = 1'-0"

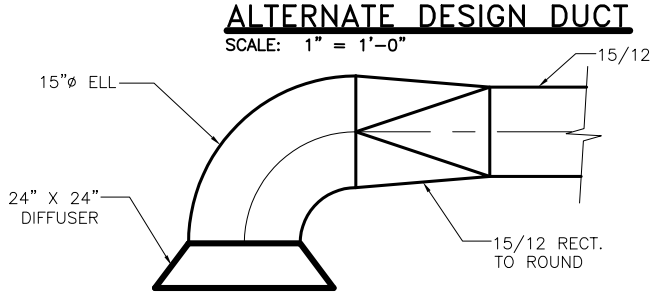

SECTION B M9 M9
SCALE: 1" = 1'-0"

ALTERNATE BID #2

HVAC FAN COIL UNITS
IN LIEU OF VAV SYSTEM

NOTES:

1. ONLY WORK PERTAINING TO HVAC SYSTEM IS PART OF ALTERNATE #2. ALL OTHER WORK IS PART OF BASE BID.

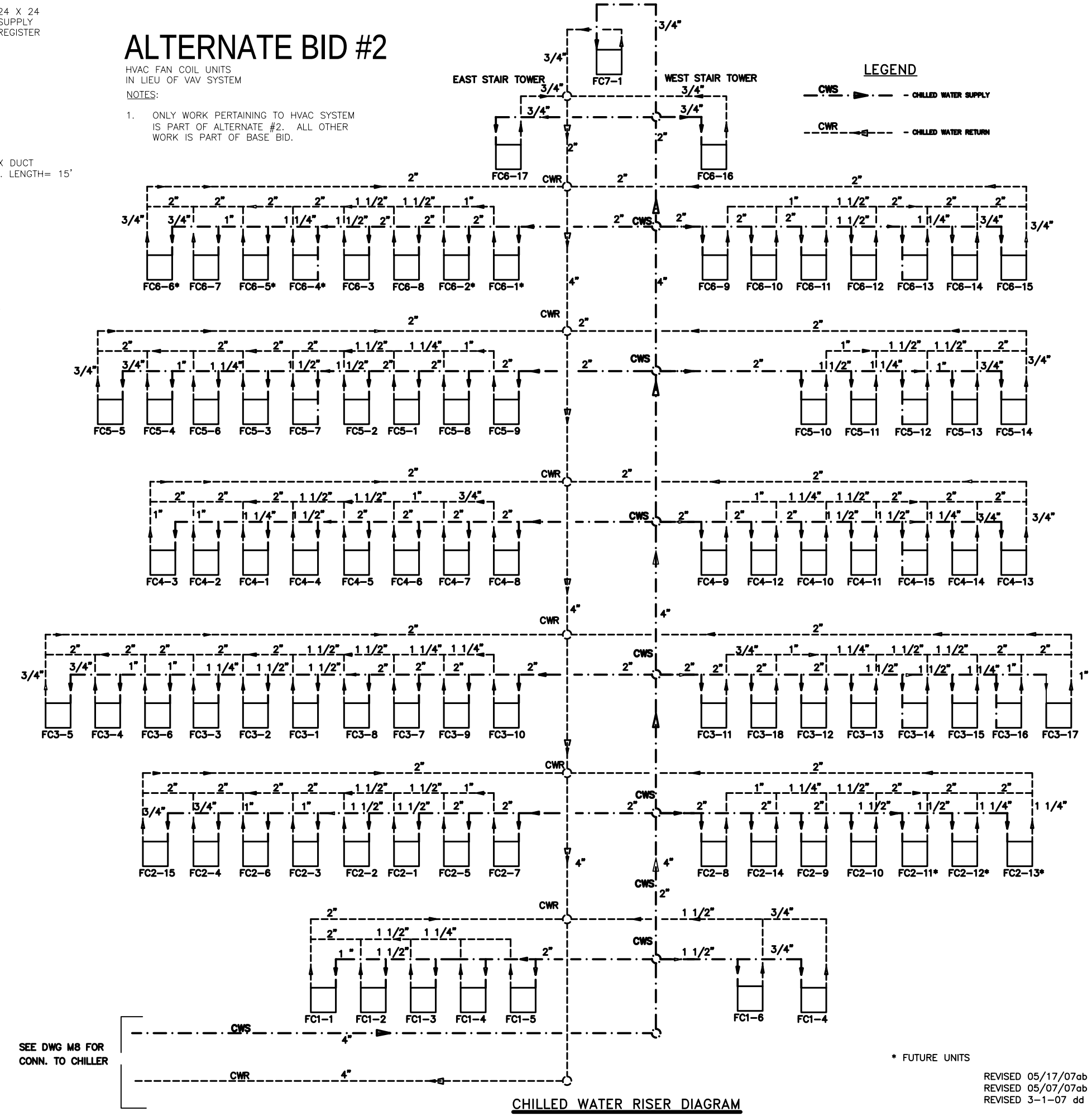

LEGEND

CWS — CHILLED WATER SUPPLY

CWR — CHILLED WATER RETURN

* FUTURE UNITS

REVISED 05/17/07ab
REVISED 05/07/07ab
REVISED 3-1-07 dd

CHILLED WATER RISER DIAGRAM

HVAC SYSTEM SCHEMATICS

ST. TAMMANY PARISH ADMIN. COMPLEX
520 OLD SPANISH TRAIL
SLIDELL, LOUISIANA

RENOVATE OFFICE BUILDING

DAMMON ENGINEERING, INC.
1095 FLORIDA AVENUE 985-649-5632 SLIDELL, LA. 70458
DAMMONENGINEERING.COM

SCALE:AS NOTED
FILE:
JOB NO. 1729
DATE:1-8-07
SHEET
M-9
OF