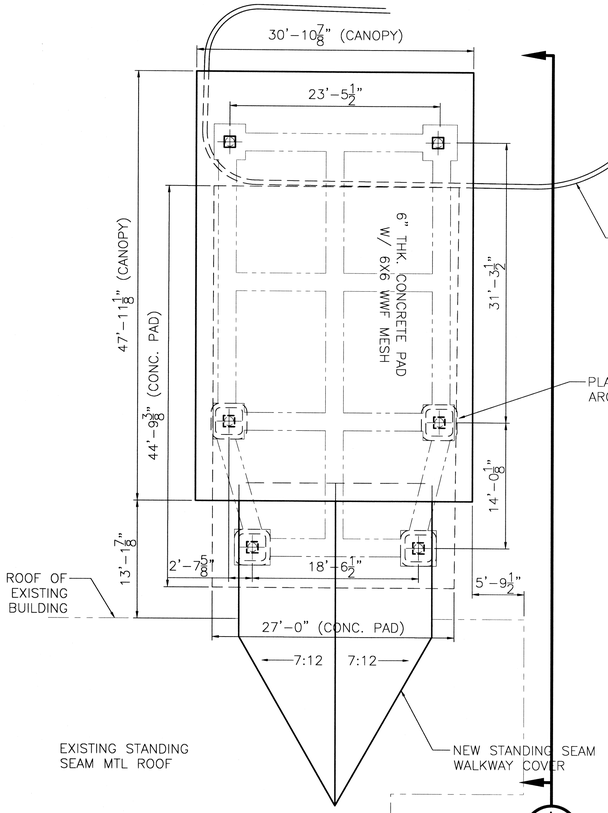

PORTE COCHERE PLAN
SCALE: 1/8"= 1'-0"

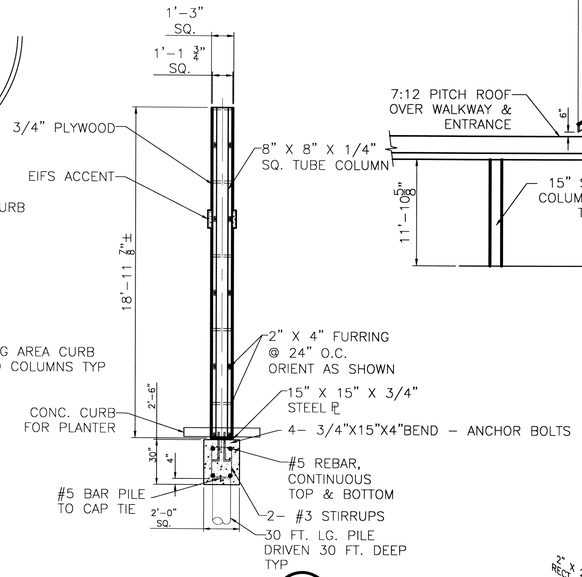

SECTION
SCALE: 1/8"= 1'-0" C S3 S3

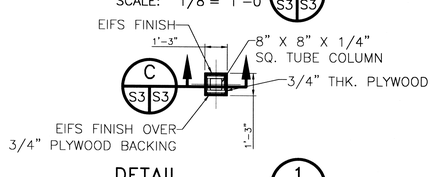

DETAIL
SCALE: 1/4"= 1'-0" 1 S3 S3

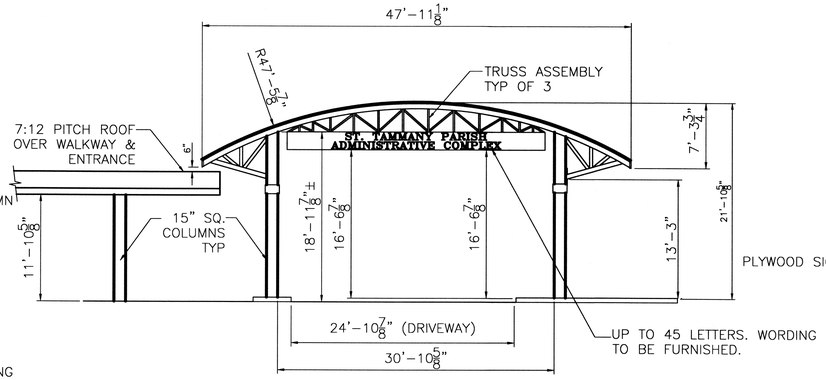

ELEVATION
SCALE: 1/8"= 1'-0" A S3 S3

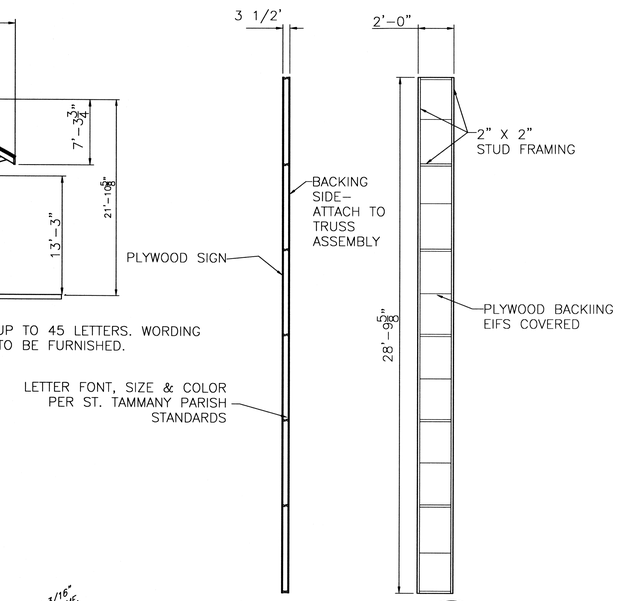

DETAIL
SCALE: 1/4"= 1'-0" 3 S3 S3

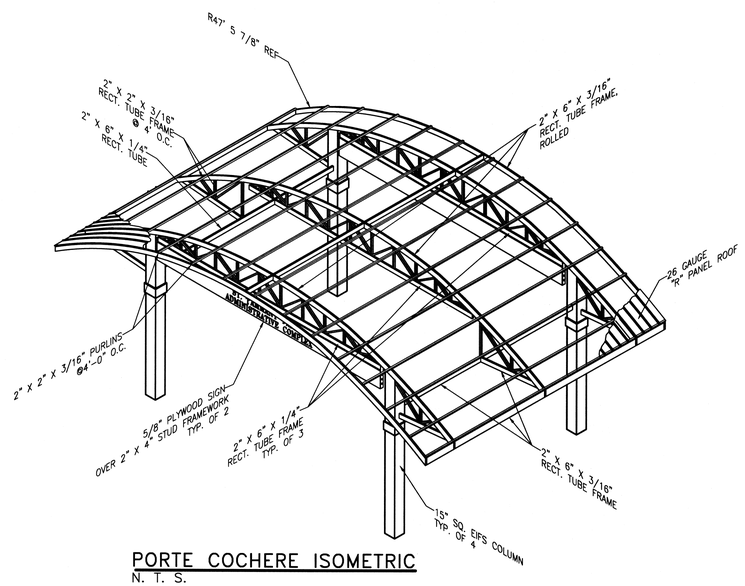

PORTE COCHERE ISOMETRIC
N. T. S.

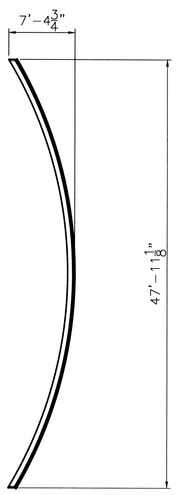

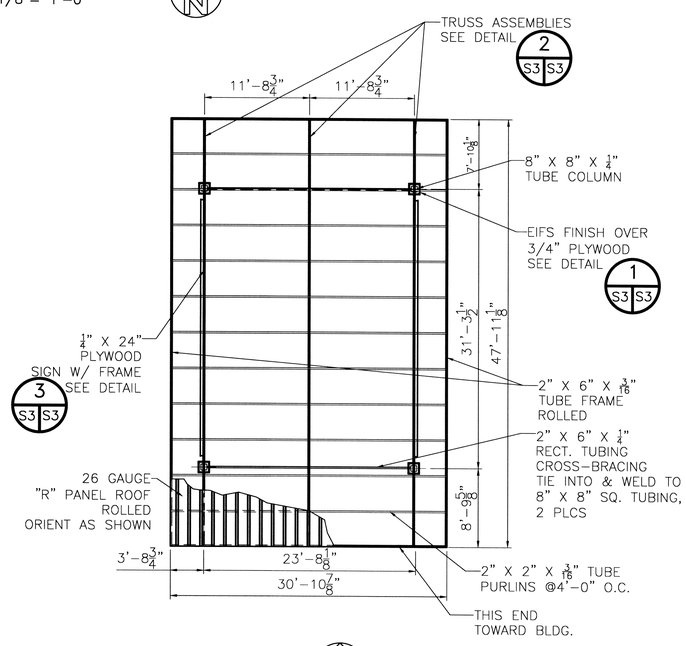

PORTE COCHERE FRAMING PLAN
SCALE: 1/8"= 1'-0"

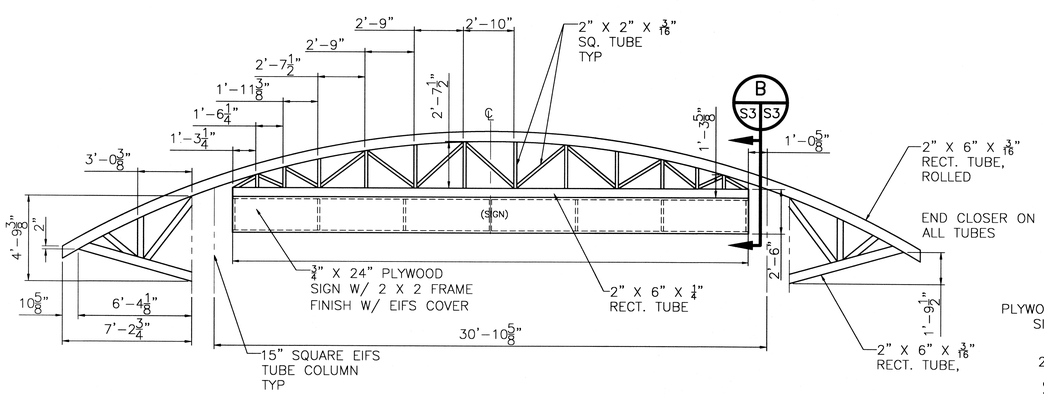

TRUSS ASSEMBLY
SCALE: 1/4"= 1'-0"

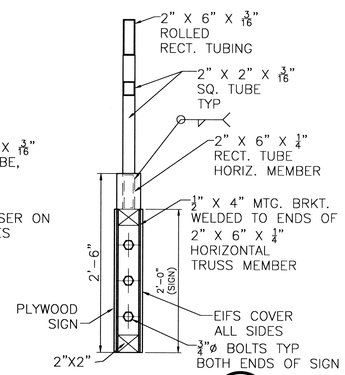

SECTION
SCALE: 1"= 1'-0" B S3 S3

REVISED: 02/19/07

CONTRACT SET- 10/10/07

PORTE COCHERE PLAN & DETAILS

ST. TAMMANY PARISH ADMIN COMPLEX
520 OLD SPANISH TRAIL
SLIDELL, LOUISIANA

RENOVATE OFFICE BUILDING

DAMMON ENGINEERING. INC.
1095 FLORIDA AVENUE 985-649-5832 SLIDELL, LA. 70458
DAMMONENGINEERING.COM

SCALE:AS NOTED
FILE:
JOB NO.
DATE:1-8-07
SHEET
S-3
OF