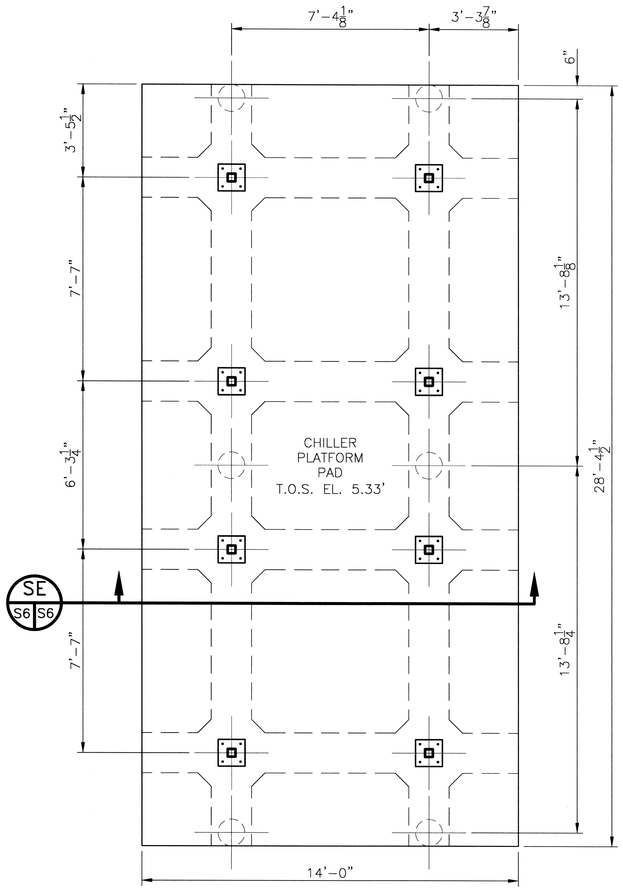

CHILLER PAD DETAIL
SCALE: 3/8"= 1'-0"

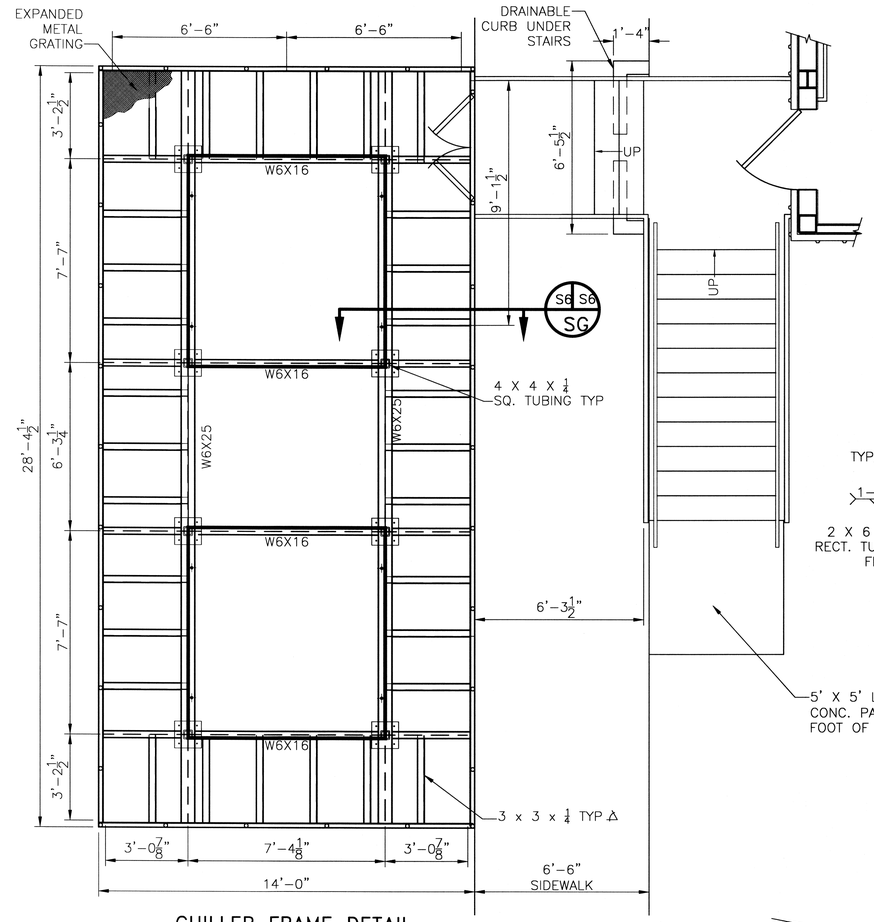

CHILLER FRAME DETAIL
SCALE: 3/8"= 1'-0"

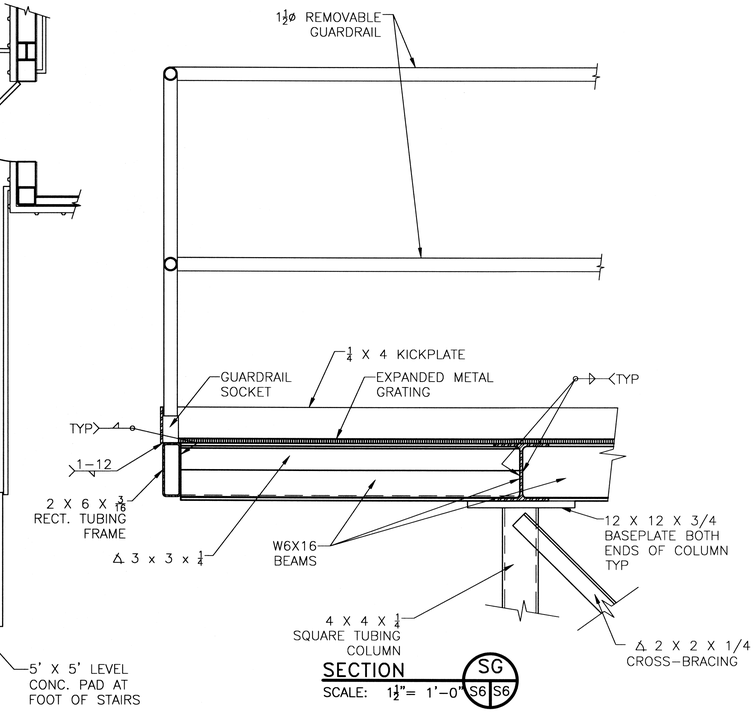

SECTION SG
SCALE: 1 1/2"= 1'-0" S6 S6

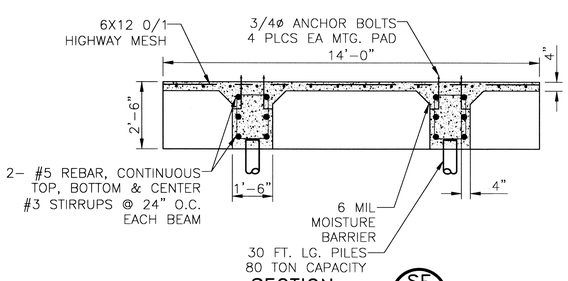

SECTION SE
SCALE: 3/8"= 1'-0" S6 S6

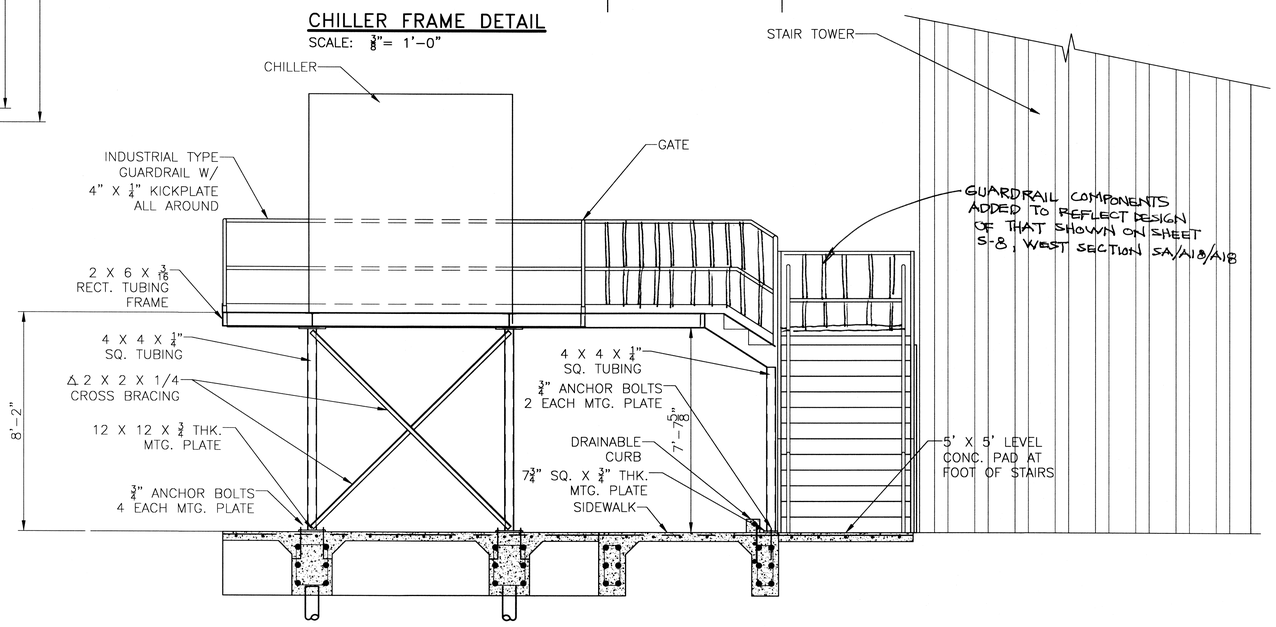

SECTION SF
SCALE: 3/8"= 1'-0" S2 S6

REVISED: 08/19/08ab
REVISED: 04/10/08ab
REVISED: 05/21/07ab
REVISED: 03/07/07ab
REVISED: 02/19/07

CHILLER DECK & PAD DETAILS

ST. TAMMANY PARISH ADMIN. COMPLEX
520 OLD SPANISH TRAIL
SLIDELL, LOUISIANA

RENOVATE OFFICE BUILDING

DAMMON ENGINEERING, INC.
1095 FLORIDA AVENUE 985-649-5832 SLIDELL, LA. 70458
DAMMONENGINEERING.COM

SCALE:AS NOTED
FILE:
JOB NO. 1729
DATE:1-8-07
SHEET
S-9
OF