PANEL SCHEDULE

PANEL: MDP
LOCATION: BLDG. WALL EXTERIOR NEAR GENERATOR
FEEDER SOURCE: ATS

VOLTAGE: 240/120V, 400A, 1Φ, 3W W/MB
ENCLOSURE: NEMA 3R SURFACE MOUNTED W/ EQUIP. GND BAR SQ D TYPE QO LOAD CENTER

CKT NO	THHN WIRE SIZE	LOAD DESCRIPTION / LOCATION	BREAKER AMP	BREAKER POLE	LOAD (kva)	AΦ	BΦ	LOAD (kva)	BREAKER POLE	BREAKER AMP	LOAD DESCRIPTION / LOCATION	THHN WIRE SIZE	CKT NO
1	4/0	PP1	200	2	26.9			10.3	2	200	PP2	4/0	2
3					25.9			12.2					4
5	-	SPARE	20	1	-			--	-	-	SPACE	-	6
7	-	SPARE	20	1	-			--	-	-	SPACE	-	8
9	-	SPACE	-	-	-			--	-	-	SPACE	-	10
11	-	SPACE	-	-	-			--	-	-	SPACE	-	12

SOLID NEUTRAL
NEUTRAL WIRE (W)

TOTAL CONNECTED LOAD (kva) = 75.3

A PHASE = 37.2 kva | B PHASE = 38.1 kva

GROUND BUS
GROUND WIRE (G)

PANEL SCHEDULE

PANEL: PP1
LOCATION: UTILITY CLOSET
FEEDER SOURCE: MDP

VOLTAGE: 240/120V, 200A, 1Φ, 3W W/MLO
ENCLOSURE: FLUSH MOUNTED W/ EQUIPMENT GND BAR SQ D TYPE QO LOAD CENTER

CKT NO	THHN WIRE SIZE	LOAD DESCRIPTION / LOCATION	BREAKER AMP	BREAKER POLE	LOAD (kva)	AΦ	BΦ	LOAD (kva)	BREAKER POLE	BREAKER AMP	LOAD DESCRIPTION / LOCATION	THHN WIRE SIZE	CKT NO
1	#12	CREW QTR & PORCH OUTLETS, PORCH LIGHTS	20	1	1.4			1.4	1	20	CREW QTR OUTLETS & LIGHTS	#12	2
3	#12	DEDICATED OUTLETS, COMM	20	1	0.4			0.4	1	20	DEDICATED OUTLETS, COMM	#12	4
5	#12	CAPTAIN QTR OUTLETS & LIGHTS	20	1	1.4			1.3	1	20	CAPTAIN QTR & DAYROOM OUTLETS & PORCH LIGHTS	#12	6
7	#12	DAYROOM OUTLETS & LIGHTS	20	1	1.4			1.1	1	20	DEDICATED, REFRIG	#12	8
9	#12	DEDICATED, REFRIG	20	1	1.1			1.1	1	20	DEDICATED, REFRIG	#12	10
11	#12	KITCHEN OUTLET & LIGHTS	20	1	0.6			1.4	1	20	KITCHEN DISHWASHER	#12	12
13	#12	KITCHEN OUTLET & BATH LIGHTS	20	1	0.8			0.3	1	20	KITCHEN OUTLETS	#12	14
15	#12	ULTRA-AIRE XT155H DEHUMIDIFIER	20	1	1.0			1.4	1	20	GAS RANGE	#12	16
17	#12	RANGE HOOD CONTROLS *	15	1	1.1			1.1	1	15	RANGE HOOD LIGHTS *	#12	18
19	#12	ATTIC FAN AND OUTLET	20	1	1.5			1.5	1	20	SEWAGE TREATMEMT	#12	20
21	#12	WASHING MACHINE	20	1	.7			--	1	20	SPARE	#12	22
23	#6	AHU, 5TON, 7.5 kw HEAT	45	2	5.3			3.6	2	30	LAUNDRY DRYER	#8	24
25					5.3			3.6					26
27	#10	WATER HEATER	30	2	2.2			4.1	2	60	5 TON CONDENSER	#6	28
29					2.2			4.1					30

SOLID NEUTRAL
NEUTRAL WIRE (W)

TOTAL CONNECTED LOAD = 52.8 kva

AΦ = 26.9 kva | BΦ = 25.9 kva

GROUND BUS
GROUND WIRE (G)

* NOTE : RANGE HOOD WIRING SHALL BE HIGH TEMPERATURE RATED AND INSTALLED IN EMT OR FLEX CONDUIT PER MANUFACTURES RECOMMENDATION.
** INSTALL BREAKER TO MATCH EQUIPMENT INSTALLED.

PANEL SCHEDULE

PANEL: PP2
LOCATION: ENGINE BAY
FEEDER SOURCE: MDP

VOLTAGE: 240/120V, 200A, 1Φ, 3W W/MLO
ENCLOSURE: FLUSH MOUNTED W/ EQUIPMENT GND BAR SQ D TYPE QO LOAD CENTER

CKT NO	THHN WIRE SIZE	LOAD DESCRIPTION / LOCATION	BREAKER AMP	BREAKER POLE	LOAD (kva)	AΦ	BΦ	LOAD (kva)	BREAKER POLE	BREAKER AMP	LOAD DESCRIPTION / LOCATION	THHN WIRE SIZE	CKT NO
1	#12	OUTLETS AND EXHAUST FAN	20	1	1.1			1.1	1	20	GAS FIRED HEATER	#12	2
3	#12	OUTLETS	20	1	0.7			1.1	1	20	GAS FIRED HEATER	#12	4
5	#12	LIGHTS	20	1	1.0			0.2	1	20	DEDICATED WEATHER-PROOF RECEPTACLE GENERATOR (BLOCK HEATER)	#12	6
7	#12	JUNCTION BOX (& 2-WAY SWITCH) FOR ROLLUP DOOR IN ENGINE BAY	20	1	0.9			0.2	1	20	GENERATOR BATTERY CHARGER	#12	8
9	#12	JUNCTION BOX (& 2-WAY SWITCH) FOR ROLLUP DOOR IN ENGINE BAY	20	1	0.9			1.5	1	20	WELL HOUSE	#12	10
11	#12	JUNCTION BOX (& 2-WAY SWITCH) FOR ROLLUP DOOR IN ENGINE BAY	20	1	0.9			1.8	1	30	ICE MAKER **	#10	12
13	-	SPACE	-	-	-			--	1	20	SPARE	#12	14
15	-	SPACE	-	-	-			--	1	20	SPARE	#12	16
17	-	SPACE	-	-	-			--	1	20	SPARE	#12	18
19	#10	BIG ASS FAN	15	2	1.2			0.5	2	10	ENGINE BAY EXHAUST FAN **	#12	20
21					1.2			0.5					22
23	-	SPACE	-	-	-			--	-	-	SPACE	-	24
25	-	SPACE	-	-	-			1.7	2	20	AIR VAC EXHAUST REMOVAL ***	#12	26
27	#10	WELL PUMP **	30	2	1.3			1.7	2	20	AIR VAC EXHAUST REMOVAL ***	#12	28
29					1.3			1.7	2	20	AIR VAC EXHAUST REMOVAL ***	#12	30

SOLID NEUTRAL
NEUTRAL WIRE (W)

TOTAL CONNECTED LOAD = 22.5 kva

AΦ = 12.2 kva | BΦ = 10.3 kva

GROUND BUS
GROUND WIRE (G)

** INSTALL BREAKER TO MATCH EQUIPMENT INSTALLED.
*** WIRE OUTLET THRU CONTROL PANEL

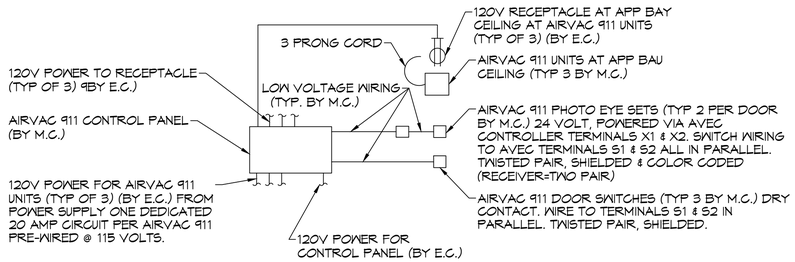

AIRVAC 911 SYSTEM CONTROL DIAGRAM

SCALE: N.T.S.

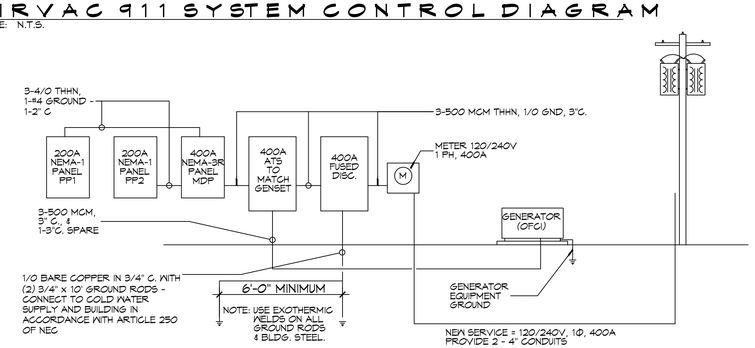

RISER DIAGRAM

SCALE: NONE

DAMMON ENGINEERING, INC.
LOUISIANA & MISSISSIPPI
www.dammonengineering.com
info@dammonengineering.com
PH: 985.649.9321
Chief Engineer: Brian Mistich, PE
554 Old Spanish Trail
Slidell, LA 70458

#	DESCRIPTION	DATE
	REVISIONS	

SEAL:

STATE OF LOUISIANA — BRIAN A. MISTICH, License No. 30187 — PROFESSIONAL ENGINEER

ST. TAMMANY FIRE PROTECTION DISTRICT NO. 1

FIRE STATION 19

51047 ALLEN ROAD
SLIDELL, LOUISIANA 70461

JOB No:	2456	DATE:	05-16-2022
DRAWN BY:	GCD	CHECKED BY:	BAM

THIS DOCUMENT, TOGETHER WITH CONCEPTS AND DESIGNS PRESENTED HEREIN, AS AN INSTRUMENT OF SERVICE, IS INTENDED ONLY FOR THE SPECIFIC PURPOSE AND SPECIFIC CLIENT FOR WHICH IT WAS PREPARED. REUSE OF AND IMPROPER RELIANCE ON THIS DOCUMENT WITHOUT WRITTEN CONSENT OF DAMMON ENGINEERING, INC. IS PROHIBITED. ANY REPRODUCTION OF THIS DOCUMENT IN WHOLE OR IN PART IS PROHIBITED.

SHEET TITLE:
PANEL SCHEDULE AND ONE LINE DIAGRAM

DRAWING NUMBER:

E104

SHEET No: 30 of 30