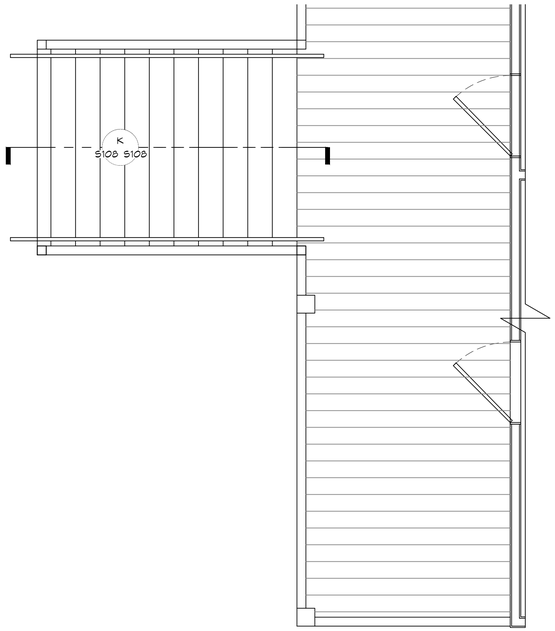

25 BACK PORCH PLAN VIEW
SCALE: 3/8"=1'-0"

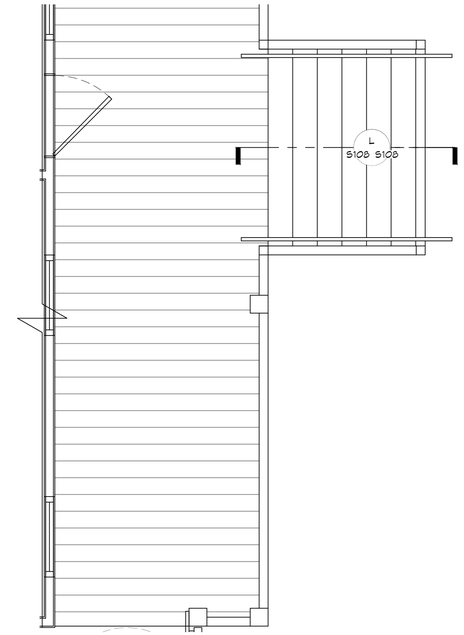

26 FRONT PORCH PLAN VIEW
SCALE: 3/8"=1'-0"

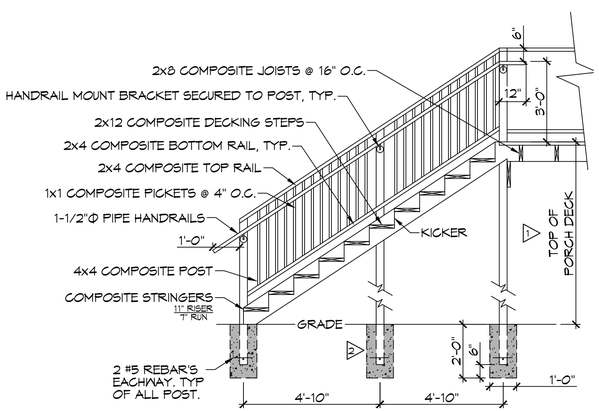

K REAR STAIR SECTION
S108 | S108 SCALE: 3/8" = 1'-0"

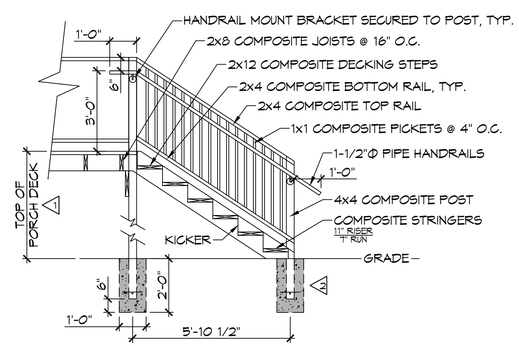

L FRONT STAIR SECTION
S108 | S108 SCALE: 3/8" = 1'-0"

GENERAL NOTES

1. FIELD VERIFY HEIGHT TO MATCH BUILDING
2. 4000 PSI CAST IN PLACE CONCRETE FOOTING

DAMMON ENGINEERING, INC.
LOUISIANA & MISSISSIPPI
www.dammonengineering.com
info@dammonengineering.com
PH: 985.649.5832

Chief Engineer: Brian Mistich, PE
5544 Jackson Trail
Slidell, LA 70458

REVISIONS

#	DESCRIPTION	DATE

SEAL:

STATE OF LOUISIANA
BRIAN A. MISTICH
License No. 30187
PROFESSIONAL ENGINEER

ST. TAMMANY FIRE PROTECTION DISTRICT No. 1

FIRE STATION 19

5704 ALLEN ROAD
SLIDELL, LOUISIANA 70461

JOB No:	2456	DATE:	05-16-2022
DRAWN BY:	CJC	CHECKED BY:	BAM

Not to be used for any purpose, including, but not limited to, construction, bidding, or obtaining permits, without the seal of a licensed professional engineer. Dammon Engineering, Inc. retains all rights to the plans, designs, and specifications contained in this document. Any reproduction or use of these plans, for which the seal has not been applied and approved without written consent of Dammon Engineering, Inc. shall be deemed a violation of the copyright and intellectual property laws.

SHEET TITLE:
ADA STAIR PLAN

DRAWING NUMBER:
S108

SHEET No: 13 of 30

FILE NAME: J:\C- Government\2456 - Allen Road Fire Station 19\Drawings\Current Drawings\S108 - ADA Stair Plan.dwg PLOT DATE & TIME: Wednesday, July 6, 2022 1:57:13 PM