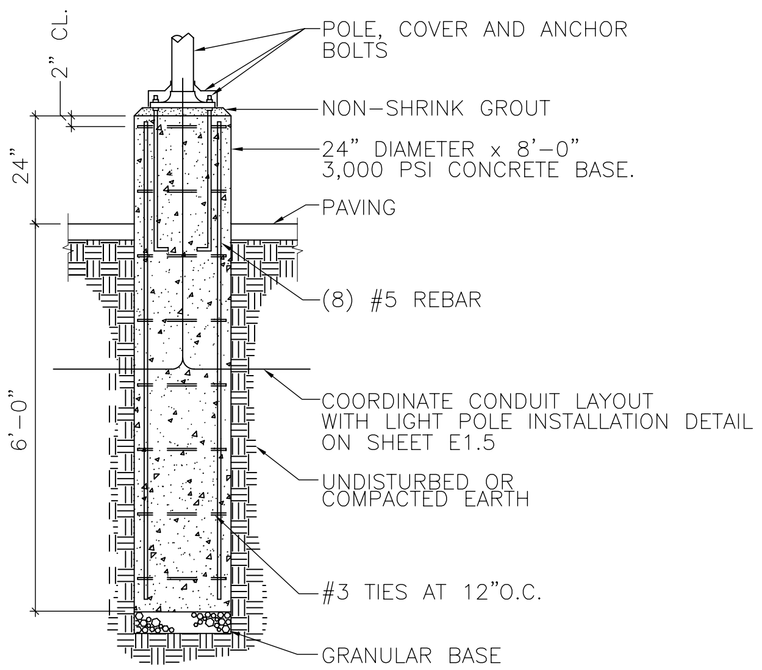

LIGHT POLE FOUNDATION DETAIL (33 / E1.5)
NOT TO SCALE

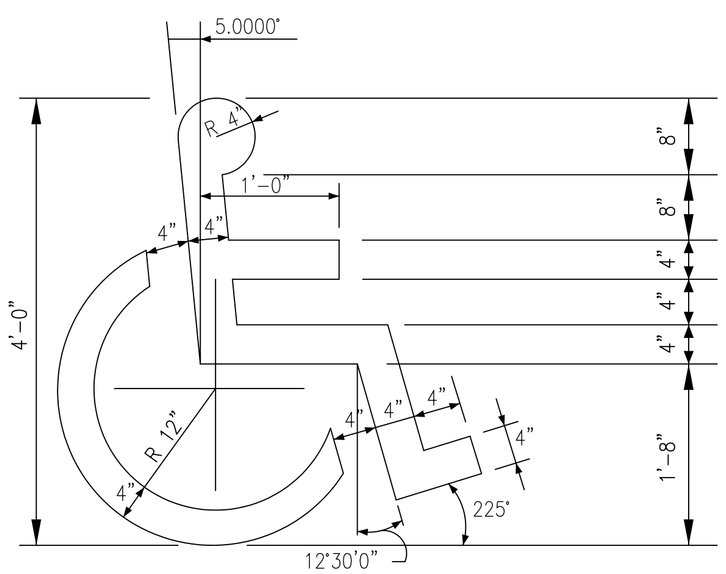

HANDICAP SYMBOL DETAIL (34 / C3.1)
N. T. S.

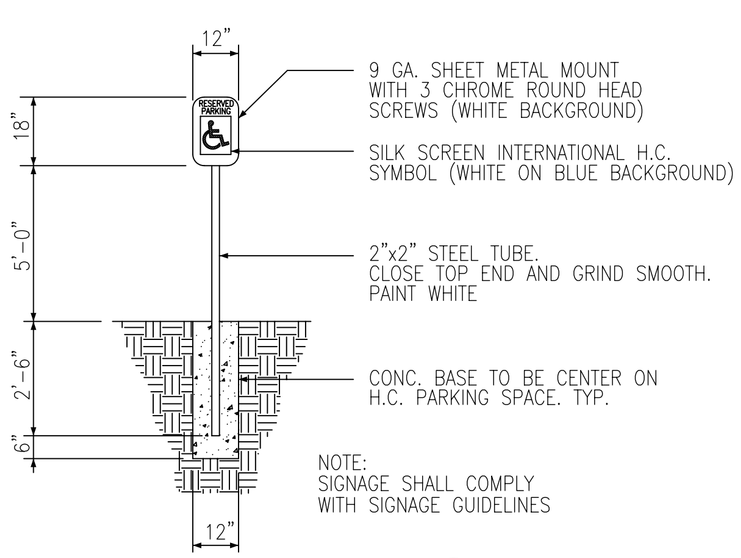

HANDICAP PARKING SIGN (35 / C3.1)
N.T.S.

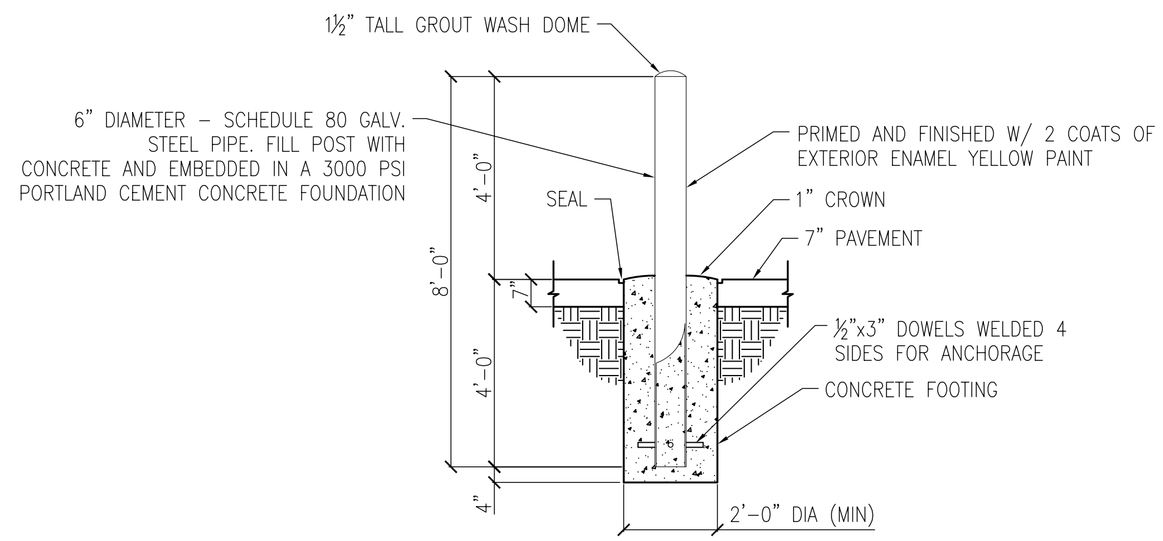

BOLLARD DETAIL (36 / C3.1)
N.T.S.

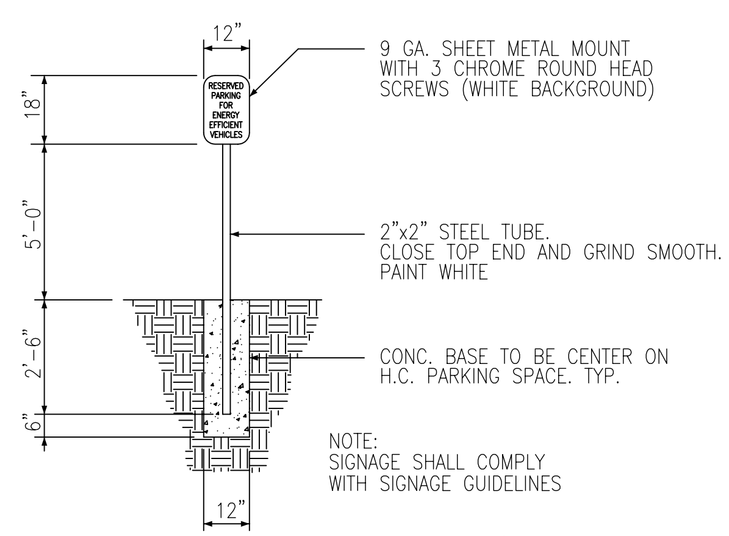

ENERGY EFFICIENT PARKING SIGN (37 / C3.1)
N.T.S.

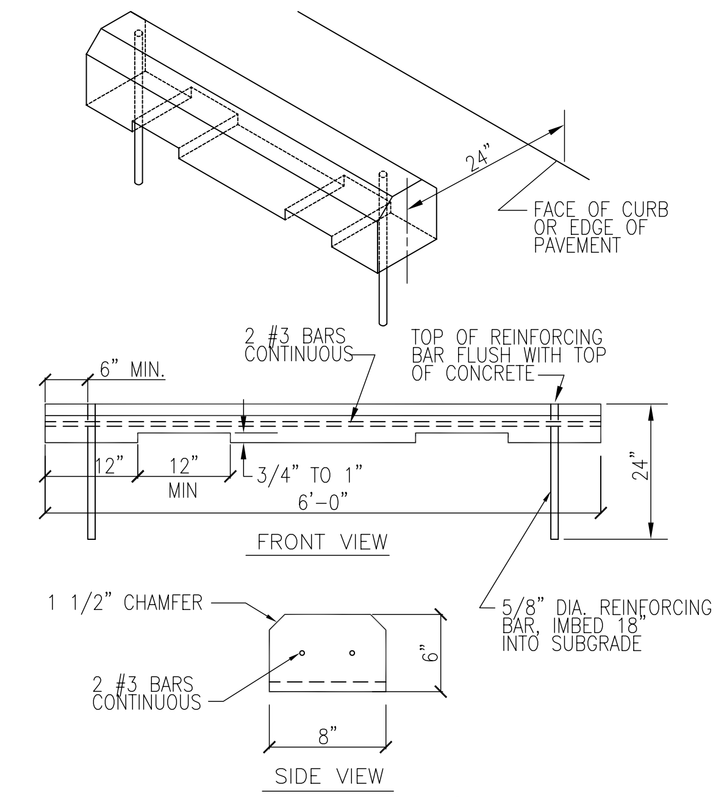

PARKING BUMPER (38 / C3.1)
(PRECAST CONCRETE)
NOT TO SCALE

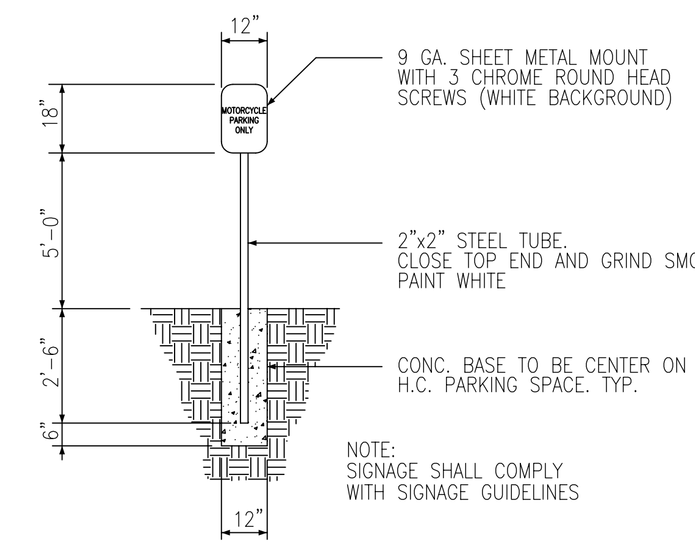

MOTORCYCLE PARKING SIGN (39 / C3.1)
N.T.S.

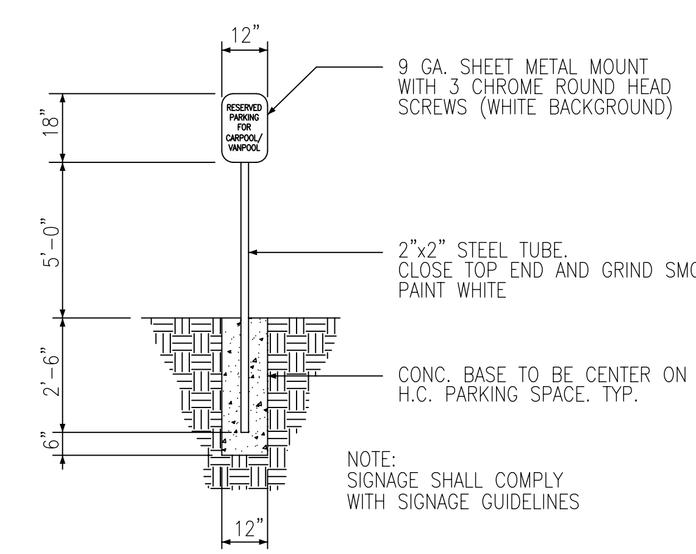

CARPOOL/VANPOOL PARKING SIGN (40 / C3.1)
N.T.S.

DESCRIPTION	DATE	APPR

NAVFAC

DAMMON ENGINEERING, INC.
CHIEF ENGINEER EMMETT G. DAMMON, P.E.
CHIEF ARCHITECT ROBERT WILTSE
1095 FLORIDA AVENUE
SLIDELL, LA 70458
(985) 649-5832

MAY 15, 2009

EMMETT G. DAMMON, JR. REGISTERED PROFESSIONAL ENGINEER 9652 STATE OF MISSISSIPPI

DES: R. WILTSE | DRW: J. TIFFANY
REVIEWED BY: R. WILTSE
PM/DM: T. ARTRIP
CHIEF ENG/ARCH. P. DAMMON

DEPARTMENT OF THE NAVY
NAVAL FACILITIES ENGINEERING COMMAND
IPT SOUTH ATLANTIC
JOHN C. STENNIS SPACE CENTER
NAVAL FACILITIES ENGINEERING COMMAND SOUTHEAST
NAVAL AIR STATION JACKSONVILLE
MISSISSIPPI
SOF RIVERINE AND COMBATANT CRAFT OPERATIONS FACILITY - PRE-FINAL
PAVING DETAILS

CODE ID. NO. N4412	SIZE D
SCALE:	AS SHOWN
MAXIMO NO.	######
STA. PROJ. NO.	P-210
WORK ORDER NO.	510247
CONSTR. CONTR. NO.	N62467-05-D-0096
NAVFAC DRAWING NO.	######-##-#-####
SHEET	20 OF 117

C3.4

DRAWFORM REVISION: 01 JAN 2009

REVDATE: