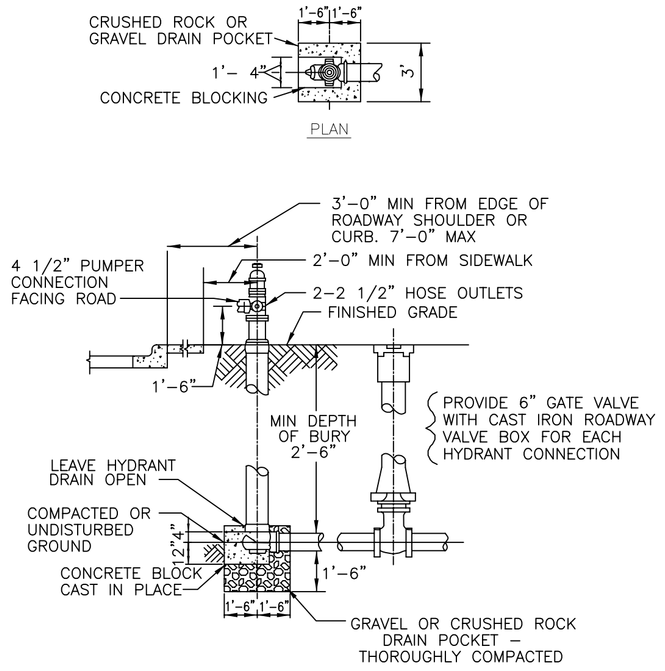

FIRE HYDRANT 45 / C6.1

NOT TO SCALE

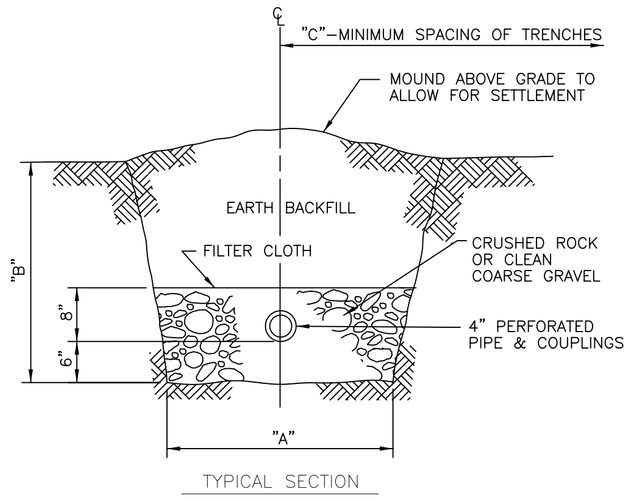

NOTE: PROVIDE DITCHES AS NECESSARY TO DIVERT SURFACE RUNOFF FROM ENTERING TRENCHES.

TYPE	"A"	"B"	"C"
1	18"	18" TO 30"	6.0'
2	24"	18" TO 30"	6.0'
3	30"	18" TO 36"	7.5'
4	36"	24" TO 36"	9.0'

SEWAGE DISPOSAL TRENCH 46 / C6.1

NOT TO SCALE

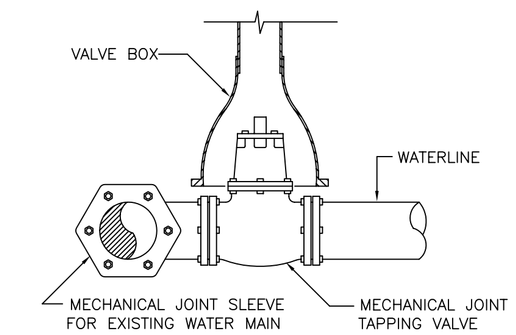

DETAIL-TAPPING SLEEVE 47 / C6.1

NOT TO SCALE

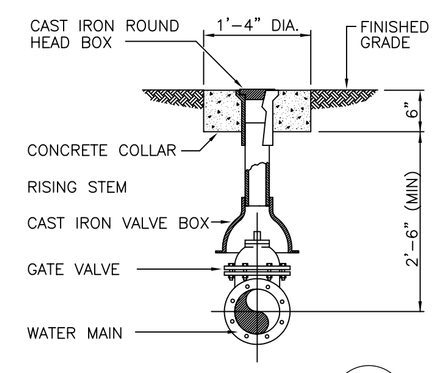

DETAIL-VALVE 48 / C6.1

NOT TO SCALE

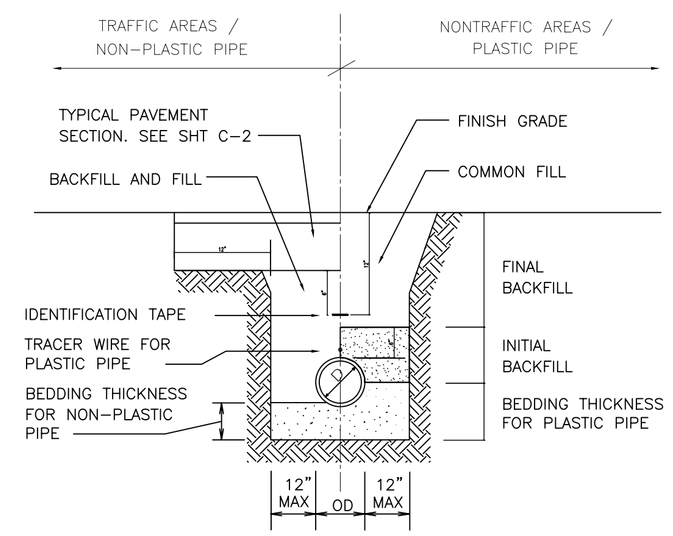

NOTE: PROVIDE BEDDING IN ACCORDANCE WITH THE SPECIFICATIONS.

TRENCH CROSS SECTION PLASTIC/NON-PLASTIC PIPE 49 / C6.1

NOT TO SCALE

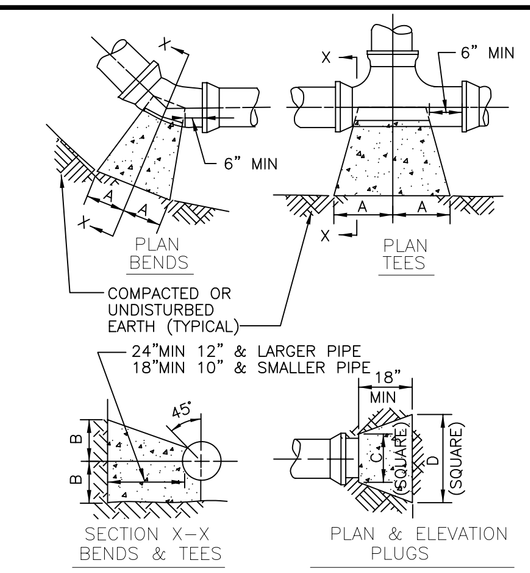

SIZE	1/4 BENDS		1/8 BENDS		1/16 BENDS		TEES		PLUGS	
	A	B	A	B	A	B	A	B	C	D
6"	16"	10"	9"	10"	6"	8"	10"	12"	10"	21"
8"	22"	13"	12"	13"	8"	10"	13"	16"	12"	29"
10"	26"	17"	14"	17"	10"	13"	16"	20"	14"	36"
12"	29"	21"	16"	21"	11"	16"	18"	24"	16"	41"
14"	35"	24"	19"	24"	12"	20"	22"	27"	18"	48"
16"	38"	27"	21"	27"	12"	24"	24"	30"	20"	54"

THRUST BLOCKS 50 / C6.1

NOT TO SCALE

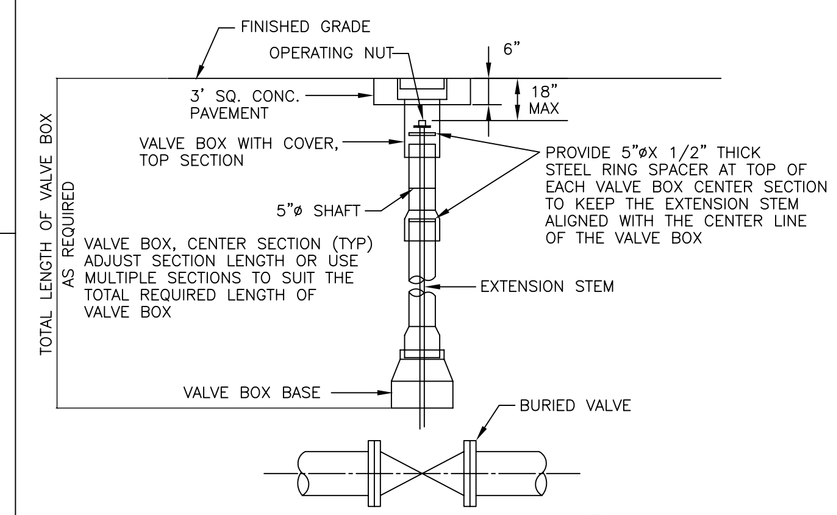

VALVE BOX DETAIL 52 / C6.1

NOT TO SCALE

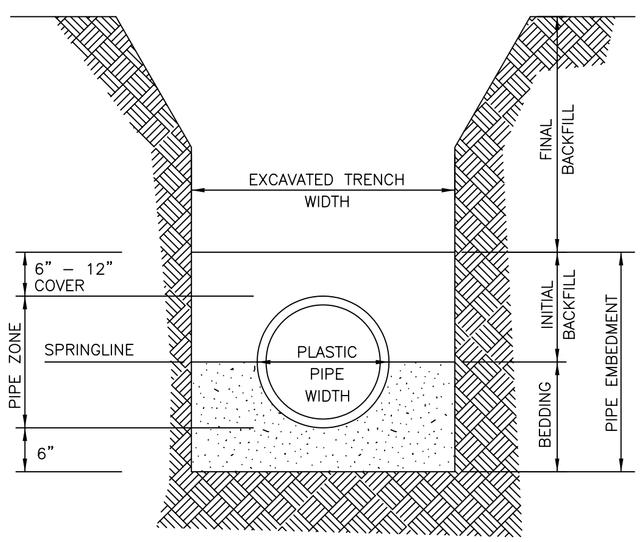

NOTE: PROVIDE BEDDING IN ACCORDANCE WITH THE SPECIFICATIONS.

TRENCH FOR PLASTIC PIPE 55 / C6.1

NOT TO SCALE

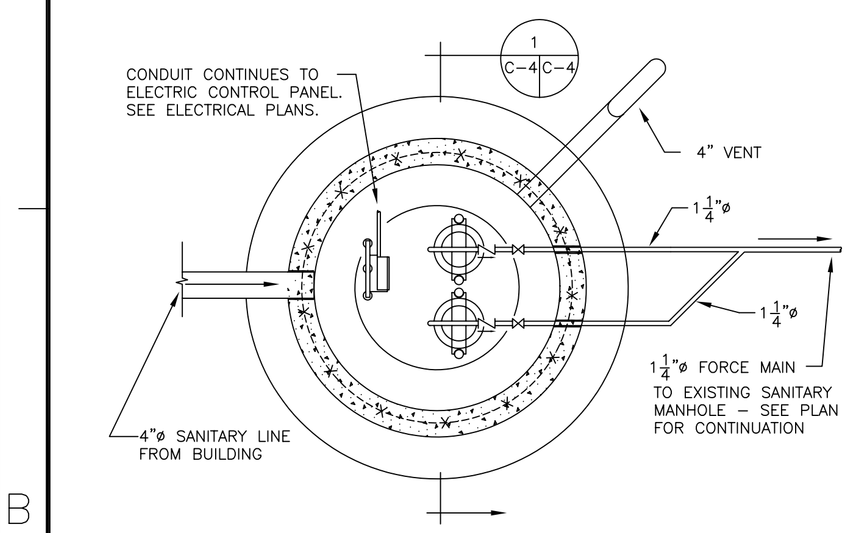

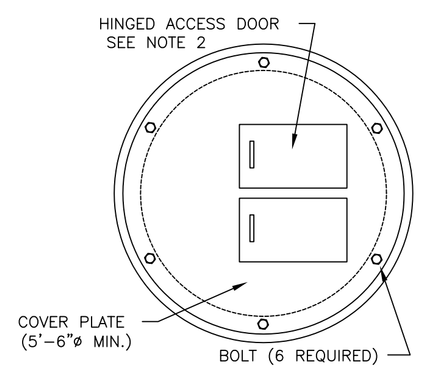

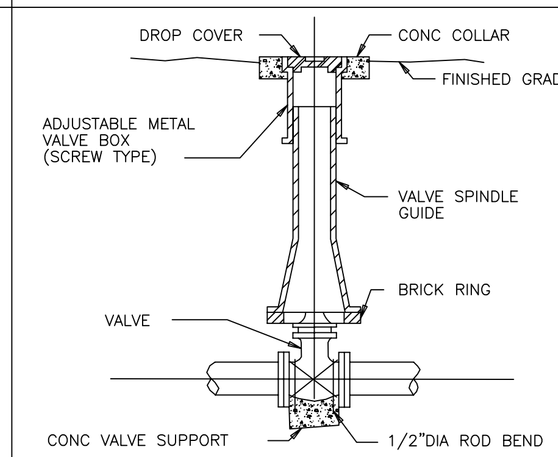

VALVE BOX 51 / C6.1

NOT TO SCALE

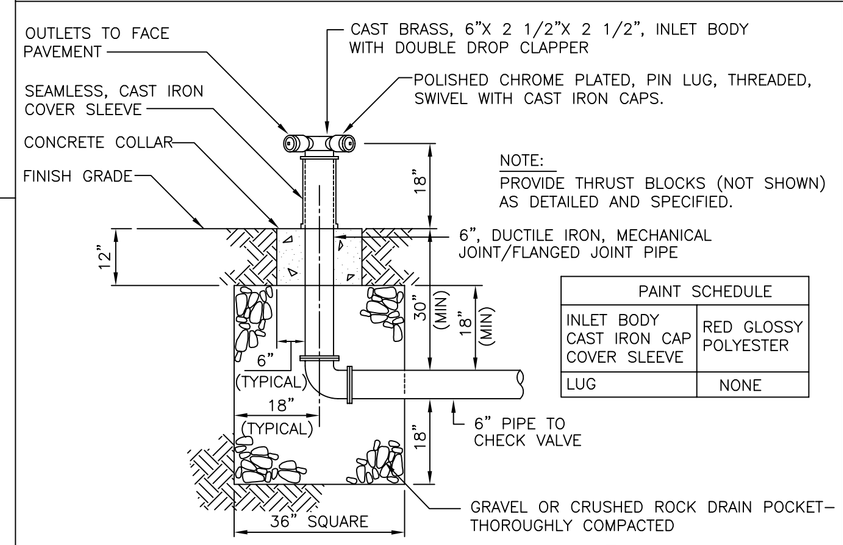

NOTE:
PROVIDE THRUST BLOCKS (NOT SHOWN) AS DETAILED AND SPECIFIED.

PAINT SCHEDULE	
INLET BODY CAST IRON CAP COVER SLEEVE	RED GLOSSY POLYESTER
LUG	NONE

DETAIL-FIRE DEPT. CONN. 54 / C6.1

NOT TO SCALE

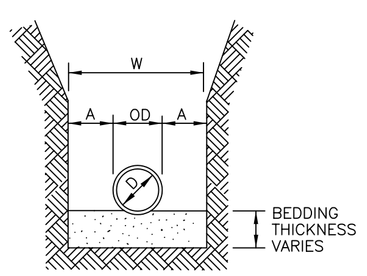

PIPE DIA "D"	MAXIMUM "A"
6" TO 15"	8"
18" TO 21"	10"
24" TO 30"	12"
33" TO 42"	15"
48" & LARGER	18"

MAXIMUM TRENCH WIDTH "W" TAKEN AT TOP OF PIPE

NOTE: PROVIDE BEDDING IN ACCORDANCE WITH THE SPECIFICATIONS.

TRENCH FOR NON-PLASTIC PIPE 57 / C6.1

NOT TO SCALE

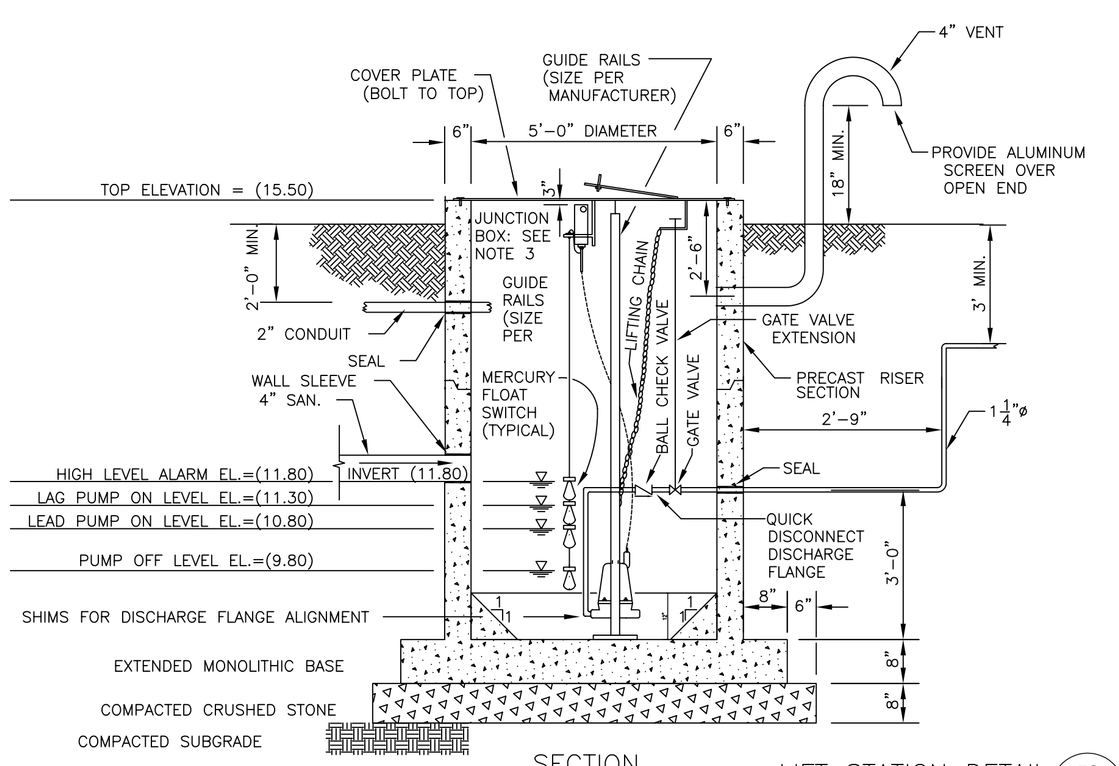

LIFT STATION DETAIL 53 / C6.1

NOT TO SCALE

PUMP DATA
DUPLEX GRINDER PUMPS
20 G.P.M. @ 20 T.D.H. EACH
WITH 2 H.P. 3750 R.P.M. MOTORS

NOTES

1. THE DUPLEX PUMP SYSTEM SHALL BE OBTAINED BY THE CONTRACTOR FROM ONE SOURCE TO INSURE COMPATABILITY OF EQUIPMENT. THE PUMP SYSTEM SHALL INCLUDE, BUT IS NOT LIMITED TO, THE FOLLOWING:
   A. TWO SUBMERSIBLE GRINDER PUMPS WITH QUICK DISCONNECT FLANGES
   B. PUMP GUIDE RAILS
   C. SHIMS FOR DISCHARGE FLANGE ALIGNMENT.
   D. COVER PLATE WITH HINGED ACCESS DOOR AND GUIDE RAIL SUPPORTS.
   E. PUMP LIFTING CHAINS AND HOOKS.
   F. DUPLEX PUMP CONTROL PANEL (NEMA IV DEAD FRONT ENCLOSURE) WITH ASSOCIATED ALARMS.
   G. FLOAT SWITCHES FOR DUPLEX PUMP CONTROLS.
2. COVER PLATE WITH HINGED ACCESS DOOR SHALL BE SIZED TO ACCOMODATE SUBMERSIBLE PUMPS PROVIDED. CONTRACTOR SHALL VERIFY ALL PUMP DIMENSIONS AND SIZE OF OPENINGS REQUIRED FOR ACCESS DOORS PRIOR TO CONSTRUCTION.
3. PROVIDE NEMA VII JUNCTION BOX (AS SHOWN) WITH A 14"x14" MIN. (12"x12" MIN. OPENING) HINGED ACCESS DOOR (NOT SHOWN) FOR ACCESS TO JUNCTION BOX, OR PROVIDE NEMA IV JUNCTION BOX OUTSIDE OF WET WELL (NOT SHOWN) MOUNTED ON OUTSIDE OF WALL OF WET WELL IN ACCORD WITH PUMP MANUFACTURER'S STANDARD INSTALLATION.

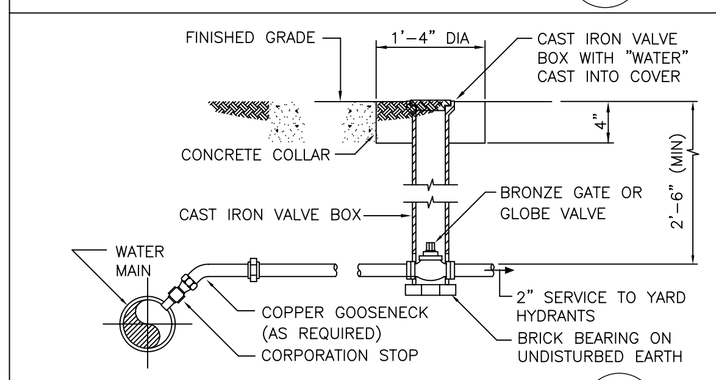

DETAIL-WATER CONNECTION 56 / C6.1

NOT TO SCALE

APPR | DATE | DESCRIPTION | SYM

NAVFAC

DAMMON ENGINEERING, INC.
CHIEF ENGINEER EMMETT G. DAMMON, P.E. | CHIEF ARCHITECT ROBERT WILTSE
1095 FLORIDA AVENUE
SLIDELL, LA 70458
(985) 649-5832
MAY 15, 2009

EMMETT G. DAMMON, JR. REGISTERED PROFESSIONAL ENGINEER 9652 STATE OF MISSISSIPPI

DES: C. DAMMON | DRW: J. TIFFANY
REVIEWED BY: R. WILTSE
PM/DM: T. ARTRIP
CHIEF ENG/ARCH. P. DAMMON

DEPARTMENT OF THE NAVY
NAVAL FACILITIES ENGINEERING COMMAND
PT SOUTH ATLANTIC
JOHN C. STENNIS SPACE CENTER

NAVAL FACILITIES ENGINEERING COMMAND SOUTHEAST
NAVAL AIR STATION, JACKSONVILLE MISSISSIPPI

SOF RIVERINE AND COMBATANT CRAFT OPERATIONS FACILITY - PRE-FINAL

UTILITY DETAILS

CODE ID. NO. N4412 | SIZE D
SCALE: AS SHOWN
MAXIMO NO. ######
STA. PROJ. NO. P-210
WORK ORDER NO. 510247
CONSTR. CONTR. NO. N62467-05-D-0096
NAVFAC DRAWING NO. ######-##-#-####
SHEET 29 OF 117

C6.5

DRAWIFORM REVISION: 01 JAN 2009

REVDATE: