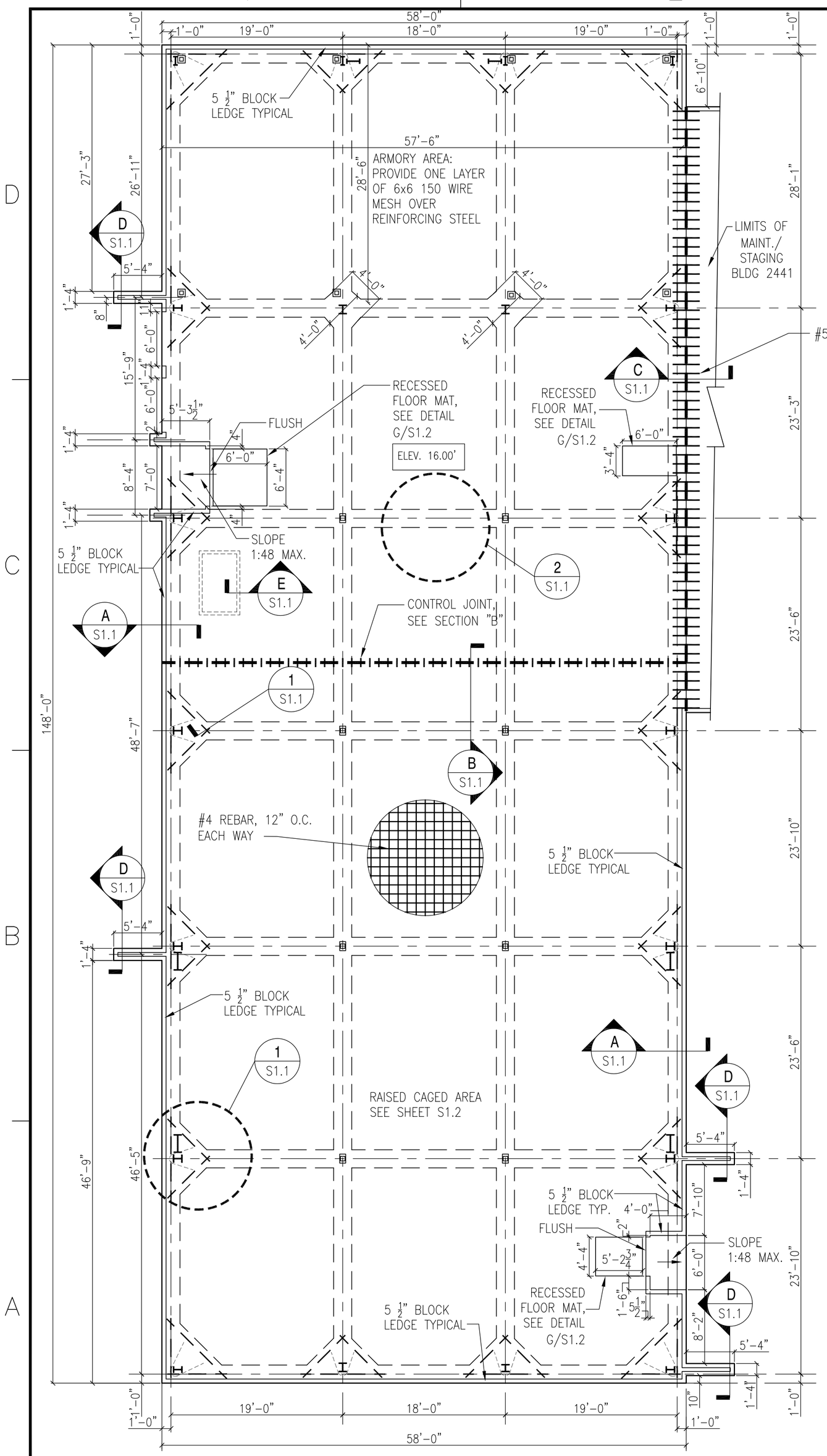

BLDG. 2440 FOUNDATION PLAN

SCALE: 1/8" = 1'-0"

PLAN NORTH

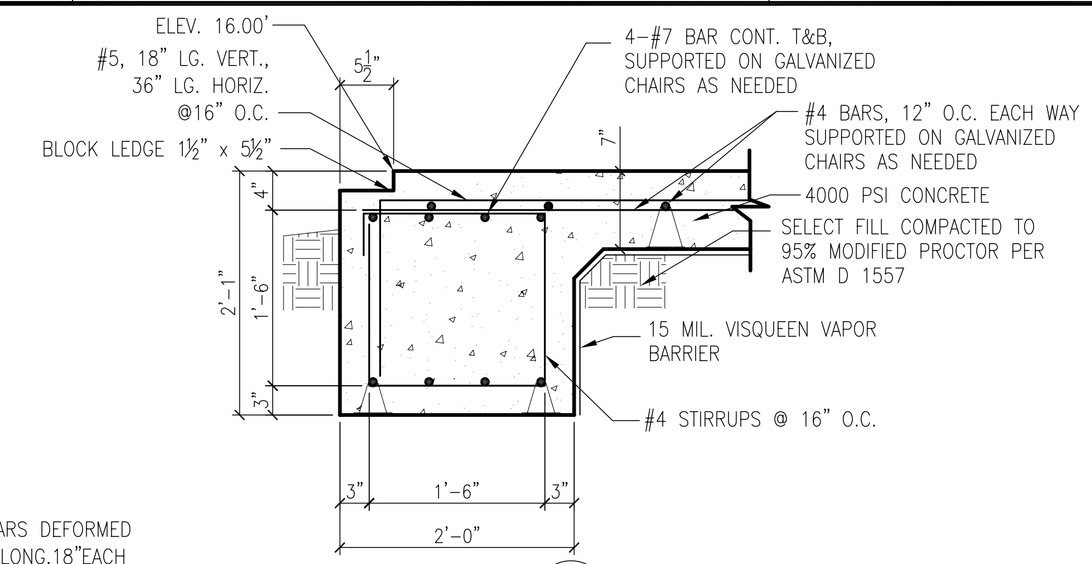

SECTION A

SCALE: 1"=1'-0"

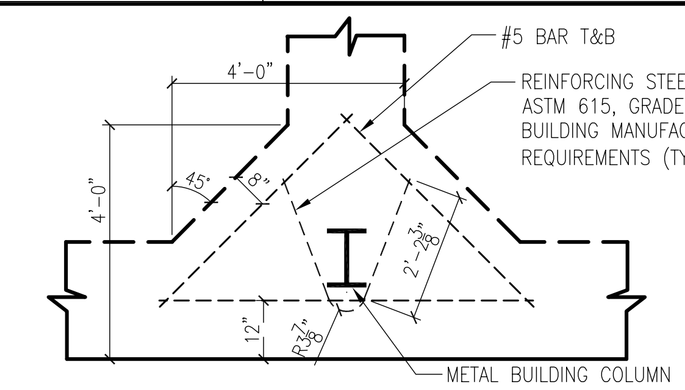

ALL FOUNDATION MATERIALS AND DIMENSIONS ARE SIMILAR TO SECTION A

FOOTING @ COLUMN DETAIL 1/S1.1

SCALE: 1/2"=1'-0"

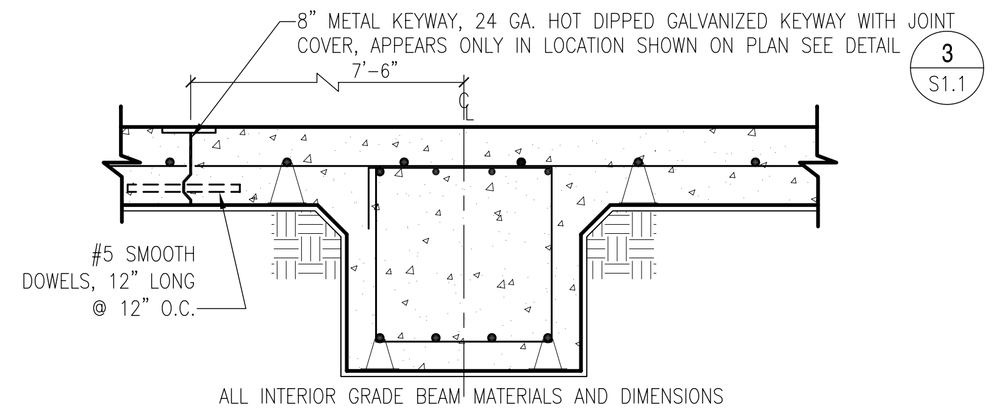

ALL INTERIOR GRADE BEAM MATERIALS AND DIMENSIONS ARE SIMILAR TO SECTION A

CONTROL JOINT SECTION B/S1.1

SCALE: 1"=1'-0"

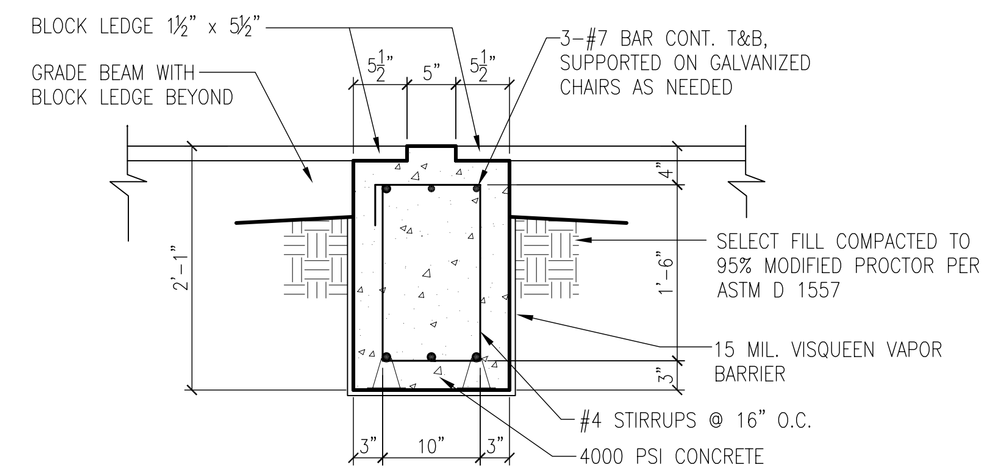

SECTION D/S1.1

SCALE: 1"=1'-0"

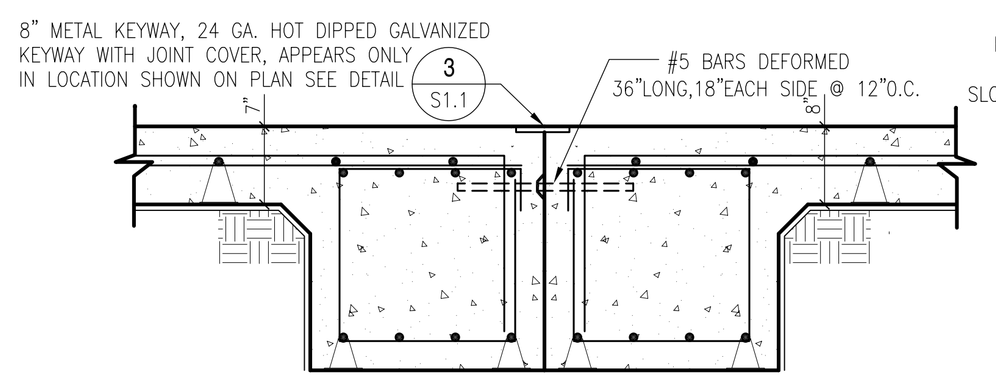

ALL FOUNDATION MATERIALS AND DIMENSIONS FOR EACH GRADE BEAM ARE SIMILAR TO SECTION A

SECTION C/S1.1

SCALE: 1"=1'-0"

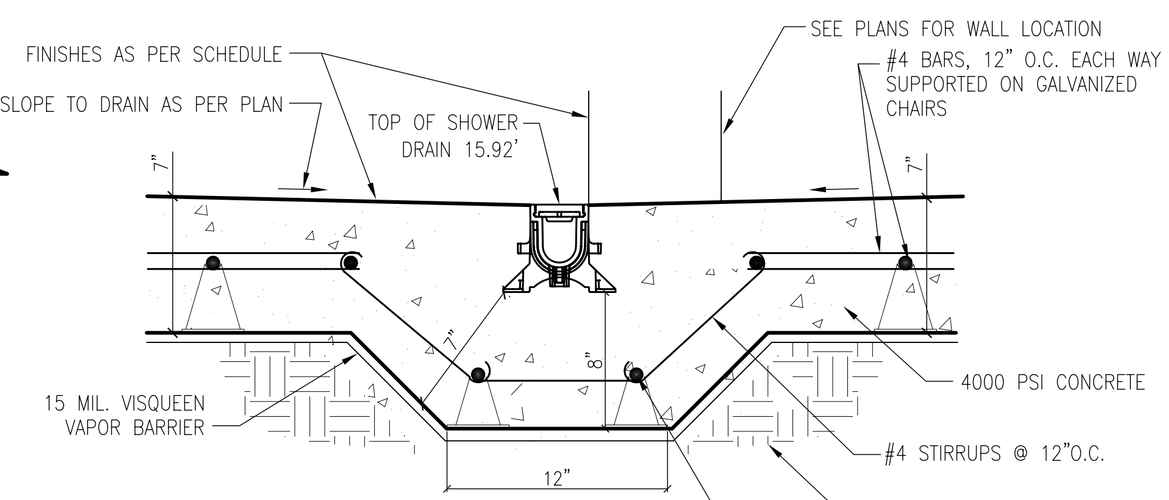

SHOWER TRENCH SECTION E/S1.1

SCALE: 1/2"=1'-0"

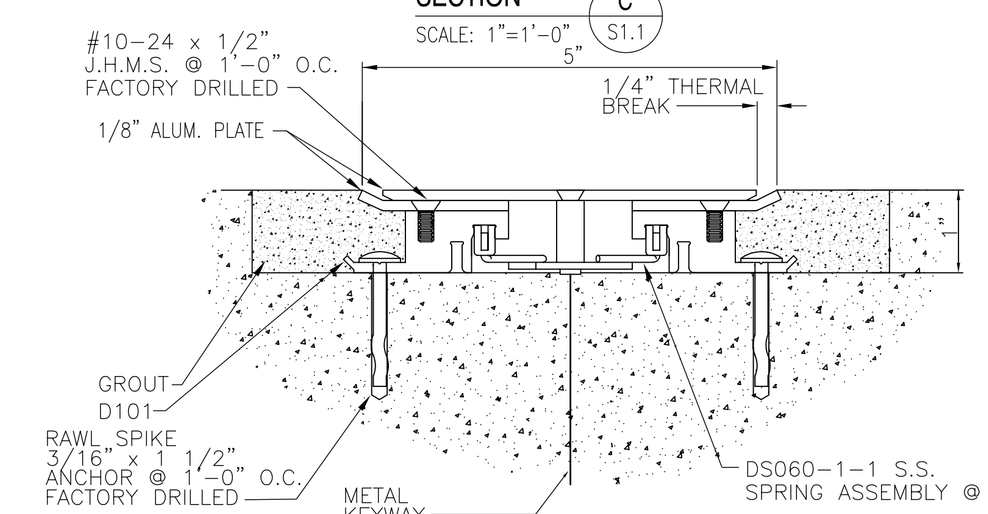

JOINT COVER 3/S1.1

SCALE: 1"=1'-0"

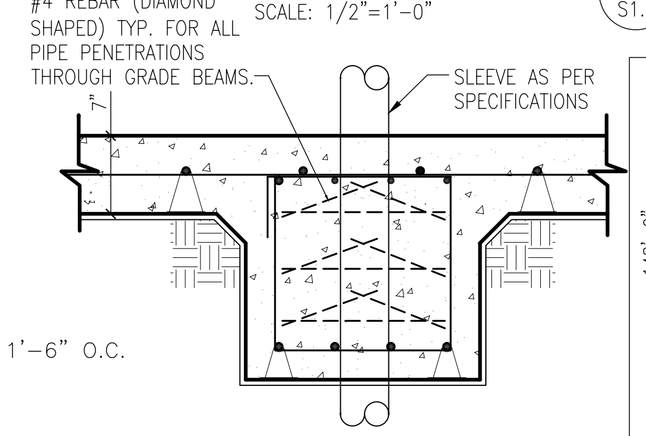

FOR HORZ. PENETRATIONS 12" OR GREATER IN DIAMETER, ADD FOOTING DEPTH EQUAL TO PIPE SIZE

ALL INTERIOR GRADE BEAM MATERIALS AND DIMENSIONS ARE SIMILAR TO SECTION A

PIPE PENETRATION AT GRADE BEAM DETAIL 2/S1.1

SCALE: 1"=1'-0"

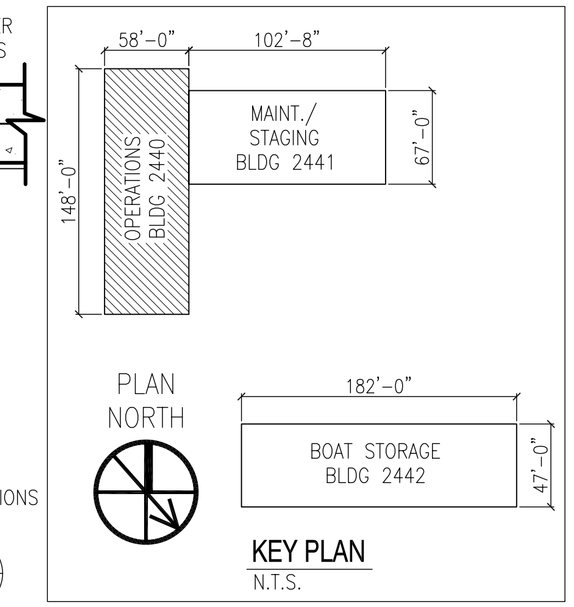

PLAN NORTH

KEY PLAN

N.T.S.

NAVFAC

DAMMON ENGINEERING, INC.
CHIEF ENGINEER EMMETT DAMMON, P.E.
CHIEF ARCHITECT ROBERT WILTSE
1095 FLORIDA AVENUE SLIDELL, LA 70458 (985) 649-5832
MAY 15, 2009

EMMETT G. DAMMON, JR. REGISTERED PROFESSIONAL ENGINEER 9652 STATE OF MISSISSIPPI

DES: C. DAMMON | DRW: C. DAMMON
REVIEWED BY: R. WILTSE
PM/DM: T. ARTRIP
CHIEF ENG/ARCH. P. DAMMON

DEPARTMENT OF THE NAVY
NAVAL FACILITIES ENGINEERING COMMAND
NAVAL FACILITIES ENGINEERING COMMAND SOUTHEAST
NAVAL AIR STATION JACKSONVILLE
JOHN C. STENNIS SPACE CENTER
MISSISSIPPI

SOF RIVERINE AND COMBATANT CRAFT OPERATIONS FACILITY - PRE-FINAL

OPERATIONS BLDG. 2440 FOUNDATION PLAN

CODE ID. NO. N4412 | SIZE D
SCALE: AS SHOWN
MAXIMO NO. ######
STA. PROJ. NO. P-210
WORK ORDER NO. 510247
CONSTR. CONTR. NO. N62467-05-D-0096
NAVFAC DRAWING NO. ######-##-#-####
SHEET 65 OF 117

S1.1

DRAWFORM REVISION: 01 JAN 2009

REV/DATE: