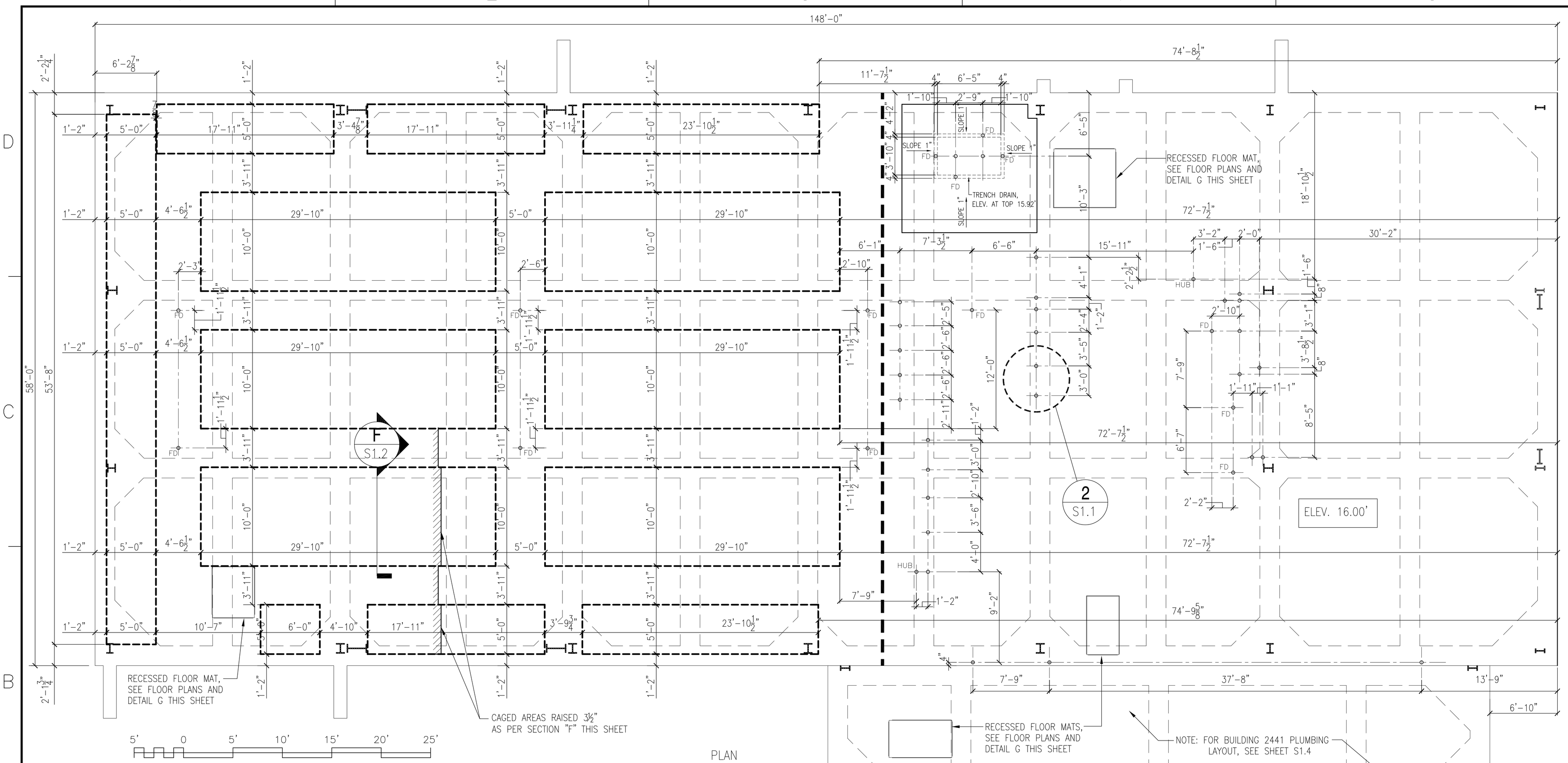

BLDG. 2440 MODIFIED CAGE AND PLUMBING LAYOUT

SCALE: 3/16" = 1'-0"

PLAN NORTH

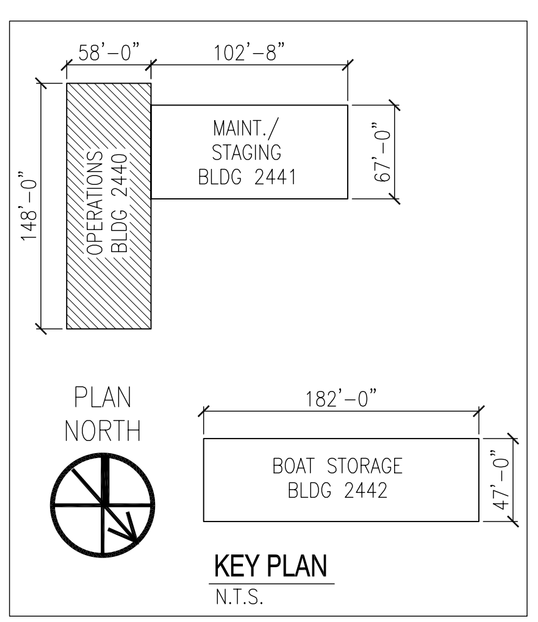

KEY PLAN

N.T.S.

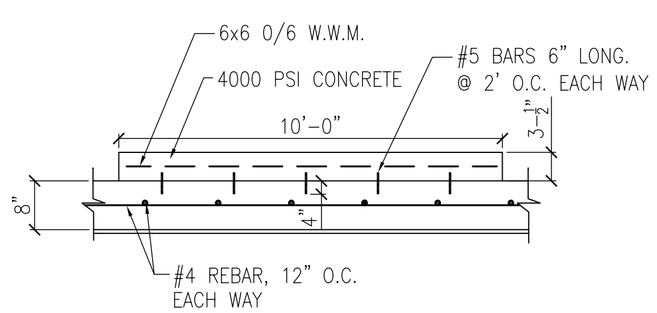

CAGE DIMENSIONS VARY, SEE PLAN

SECTION F / S1.2

N.T.S.

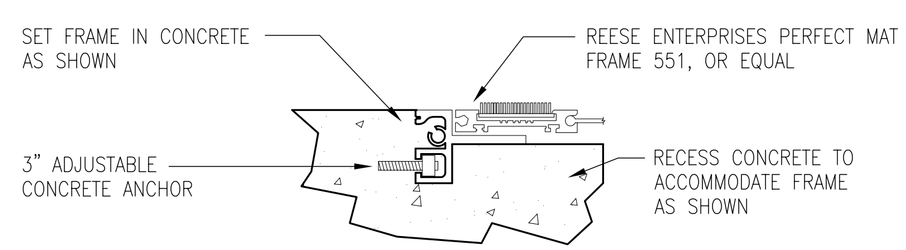

RECESSED FLOOR MAT SECTION G / S1.2

N.T.S.

NAVFAC

DAMMON ENGINEERING, INC.
CHIEF ENGINEER EMMETT DAMMON, P.E. — CHIEF ARCHITECT ROBERT WILTSE
1095 FLORIDA AVENUE
SLIDELL, LA 70458
(985) 649-5832
MAY 15, 2009

EMMETT G. DAMMON, JR. REGISTERED PROFESSIONAL ENGINEER 9652 STATE OF MISSISSIPPI

DES: C. DAMMON | DRW: C. DAMMON
REVIEWED BY: R. WILTSE
PM/DM: T. ARTRIP
CHIEF ENG/ARCH. P. DAMMON

DEPARTMENT OF THE NAVY
NAVAL FACILITIES ENGINEERING COMMAND
IPT SOUTH ATLANTIC
JOHN C. STENNIS SPACE CENTER

NAVAL FACILITIES ENGINEERING COMMAND SOUTHEAST
NAVAL AIR STATION JACKSONVILLE MISSISSIPPI

SOF RIVERINE AND COMBATANT CRAFT OPERATIONS FACILITY - PRE-FINAL

BLDG. 2440 MODIFIED CAGE AND PLUMBING LAYOUT

CODE ID. NO. N4412	SIZE D
SCALE:	AS SHOWN
MAXIMO NO.	######
STA. PROJ. NO.	P-210
WORK ORDER NO.	510247
CONSTR. CONTR. NO.	N62467-05-D-0096
NAVFAC DRAWING NO.	######-##-#-####
SHEET	66 OF 117

S1.2

DRAWFORM REVISION: 01 JAN 2009

REVDATE: