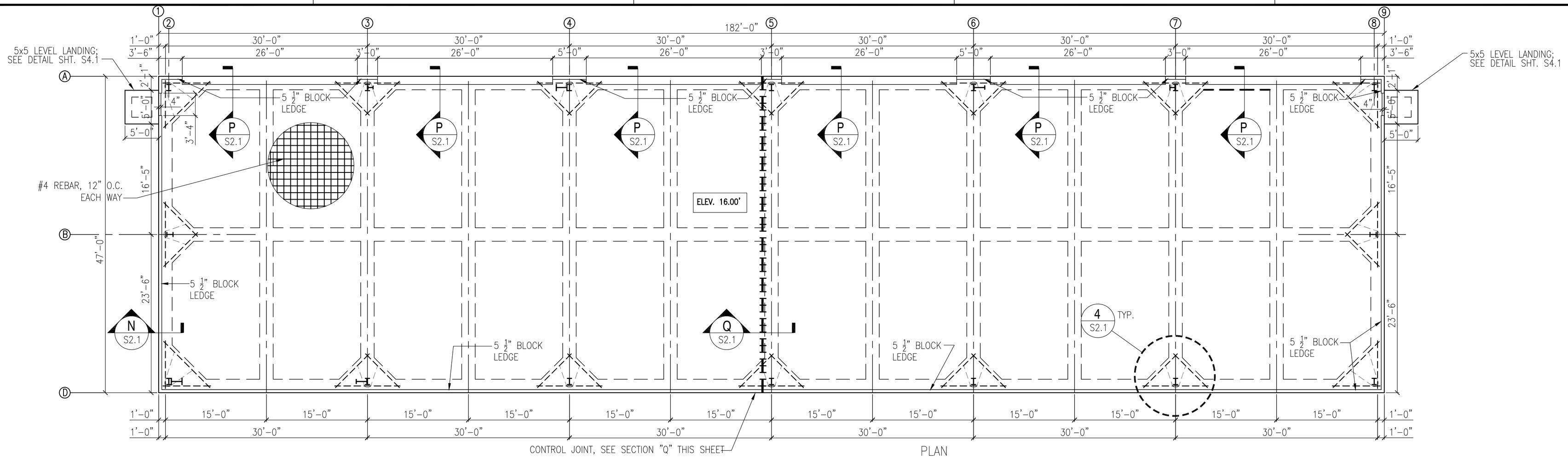

PLAN NORTH

5' 0 5' 10' 15' 20' 25'

BOAT STORAGE BLDG. 2442 FOUNDATION PLAN

SCALE: 1/8"=1'-0"

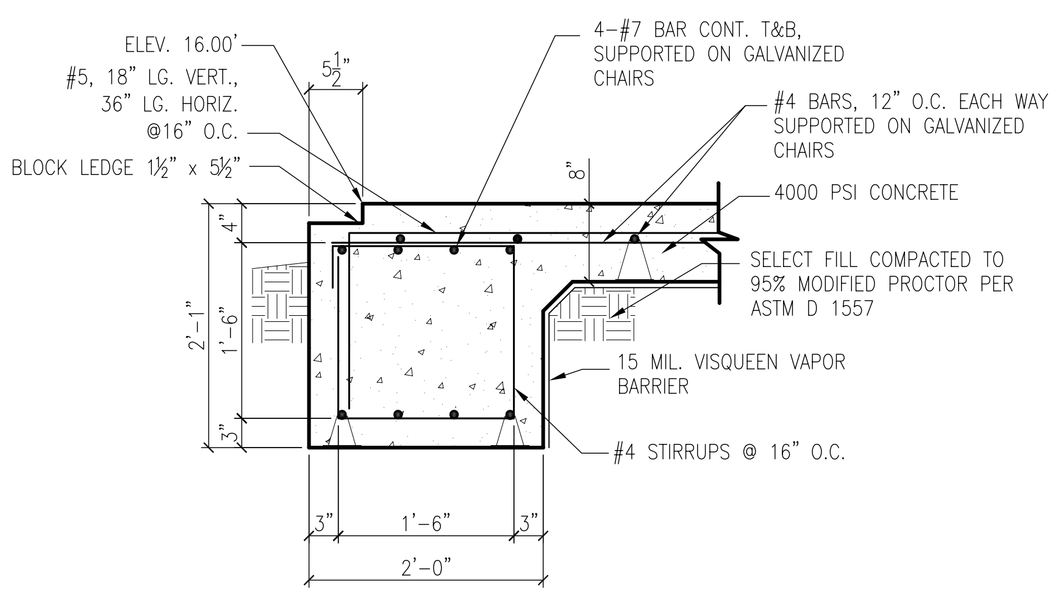

SECTION N S2.1

SCALE: 1"=1'-0"

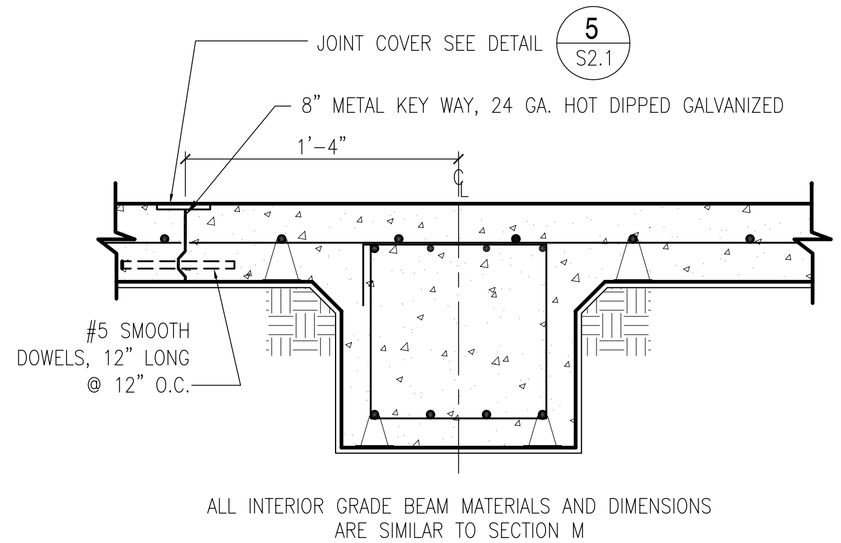

CONTROL JOINT SECTION Q S2.1

SCALE: 1"=1'-0"

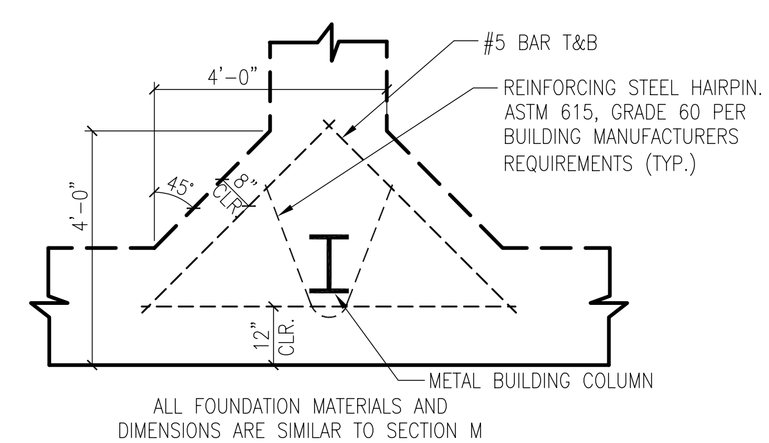

FOOTING @ COLUMN DETAIL 4 S2.1

SCALE: 1/2"=1'-0"

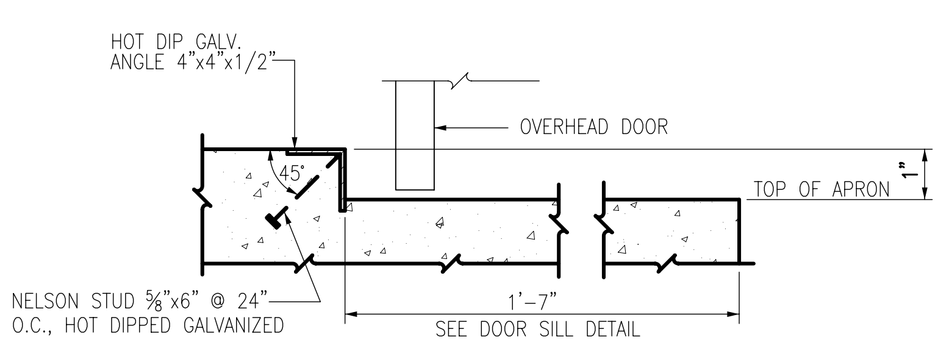

ANGLE EMBEDS SECTION P S2.1

N.T.S.

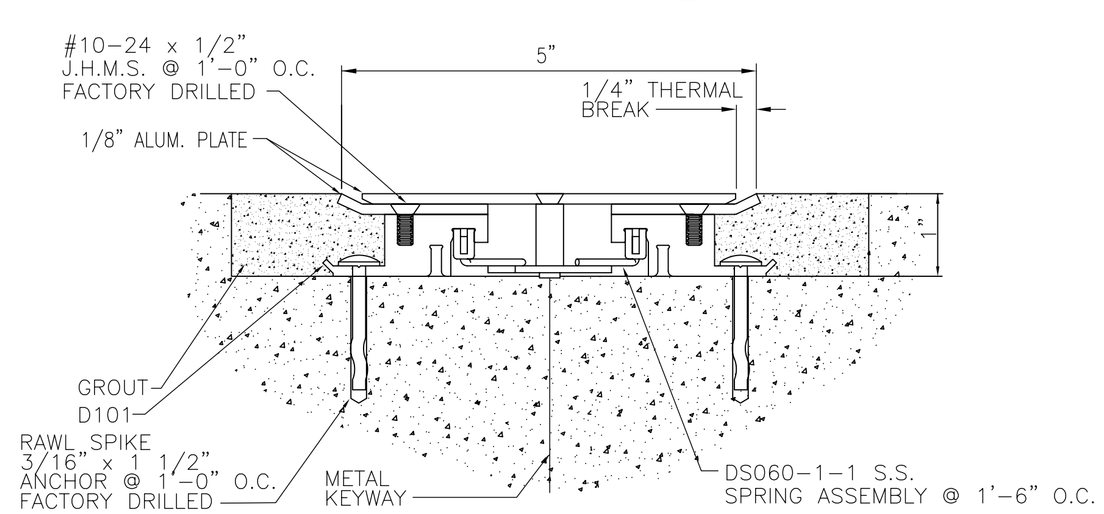

JOINT COVER 5 S2.1

SCALE: N.T.S.

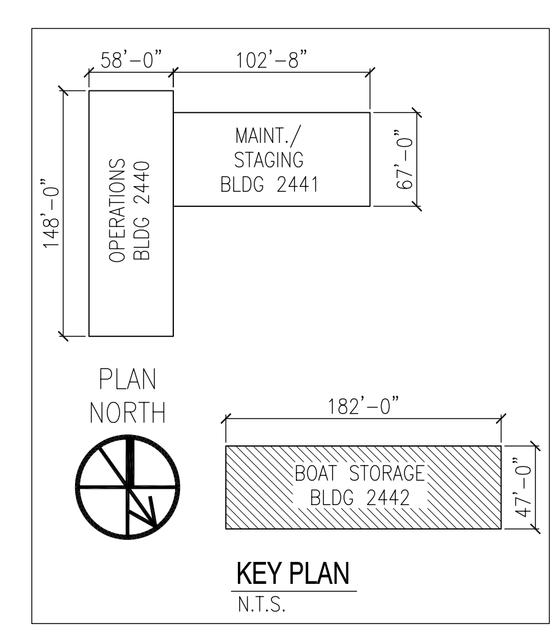

KEY PLAN

N.T.S.

APPR	
DATE	
DESCRIPTION	
MJS	

NAVFAC

DAMMON ENGINEERING, INC.
CHIEF ENGINEER EMMETT DAMMON, P.E. — CHIEF ARCHITECT ROBERT WILTSE
1095 FLORIDA AVENUE
SLIDELL, LA 70458
(985) 649-5832
MAY 15, 2009

EMMETT G. DAMMON, JR. REGISTERED PROFESSIONAL ENGINEER 9652 STATE OF MISSISSIPPI

DES: C. DAMMON | DRW: C. DAMMON
REVIEWED BY: R. WILTSE
PM/DM: T. ARTRIP
CHIEF ENG/ARCH. P. DAMMON

DEPARTMENT OF THE NAVY
NAVAL FACILITIES ENGINEERING COMMAND SOUTHEAST
IPT SOUTH ATLANTIC — NAVAL FACILITIES ENGINEERING COMMAND
NAVAL AIR STATION JACKSONVILLE — MISSISSIPPI
JOHN C. STENNIS SPACE CENTER

SOF RIVERINE AND COMBATANT CRAFT OPERATIONS FACILITY - PRE-FINAL

STORAGE BLDG. 2442 FOUNDATION PLAN

CODE ID. NO. N4412	SIZE D
SCALE:	AS SHOWN
MAXIMO NO.	######
STA. PROJ. NO.	P-210
WORK ORDER NO.	510247
CONSTR. CONTR. NO.	N62467-05-D-0096
NAVFAC DRAWING NO.	######-##-#-####
SHEET	69 OF 117

S2.1

DRAWFORM REVISION: 01 JAN 2009

REVDATE: