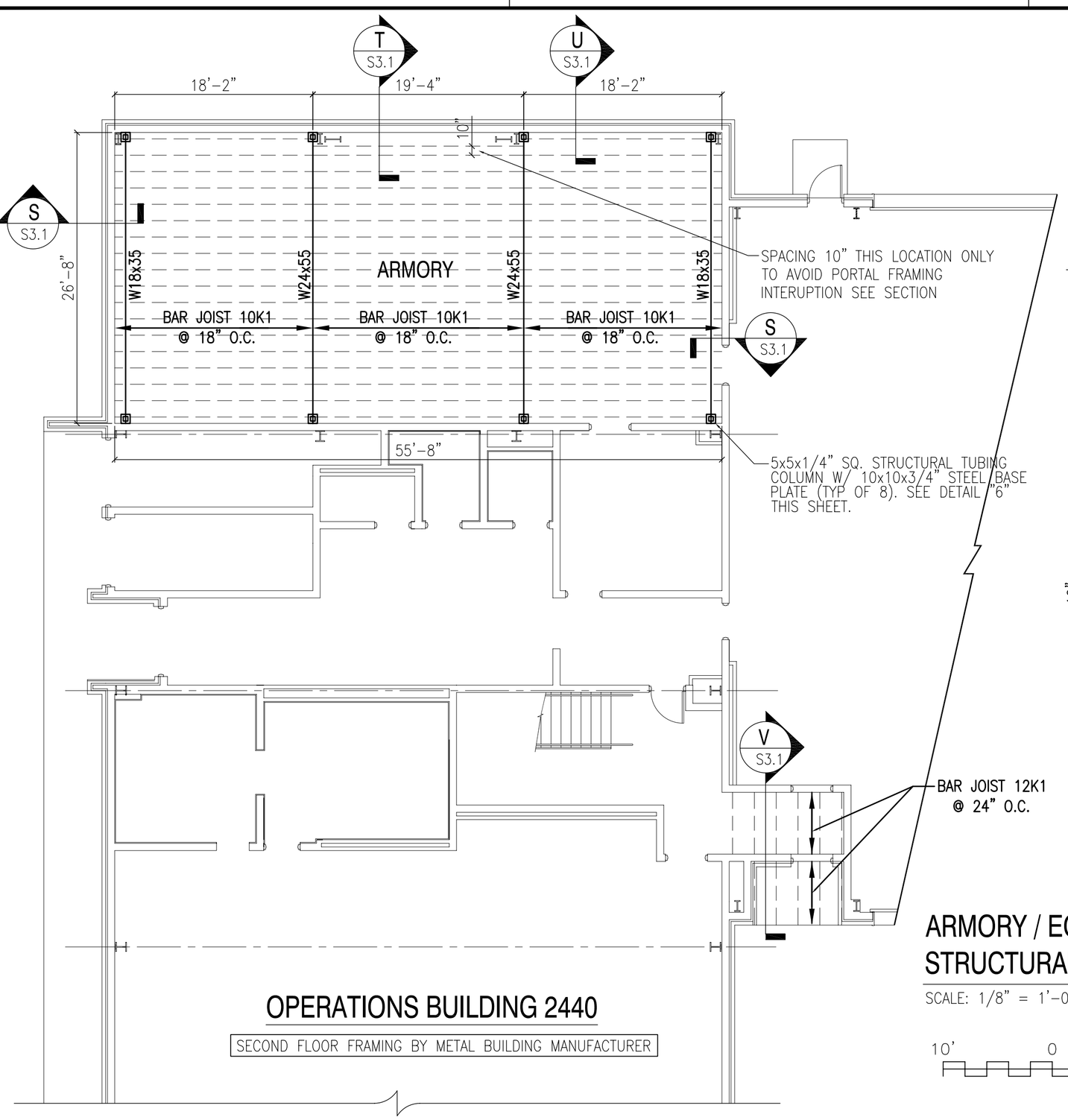

ARMORY / EQ. MEZZANINE STRUCTURAL FRAMING PLAN

SCALE: 1/8" = 1'-0"

PLAN NORTH

10' 0 10' 20' 30'

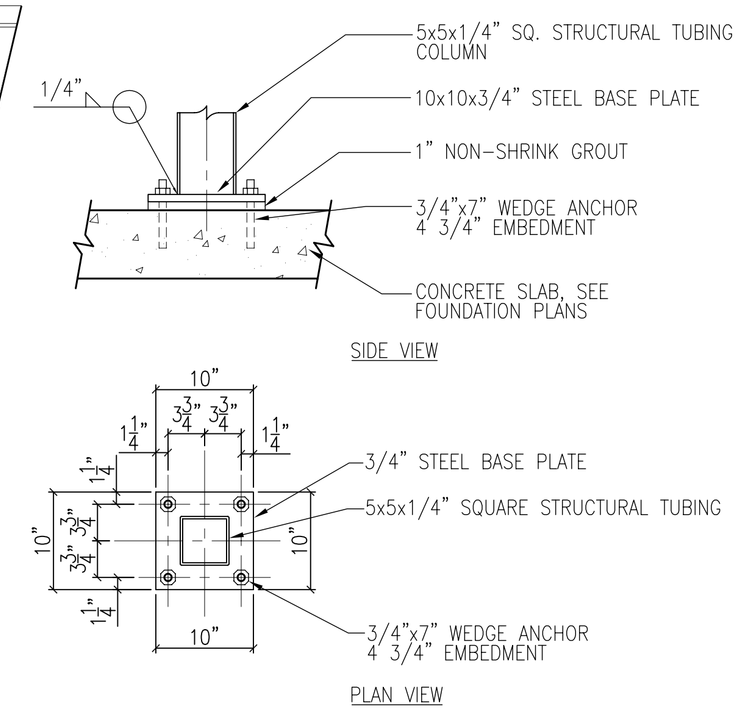

COLUMN BASE PLATE DETAIL (6 / S3.1)

SCALE: 3/4" = 1'-0"

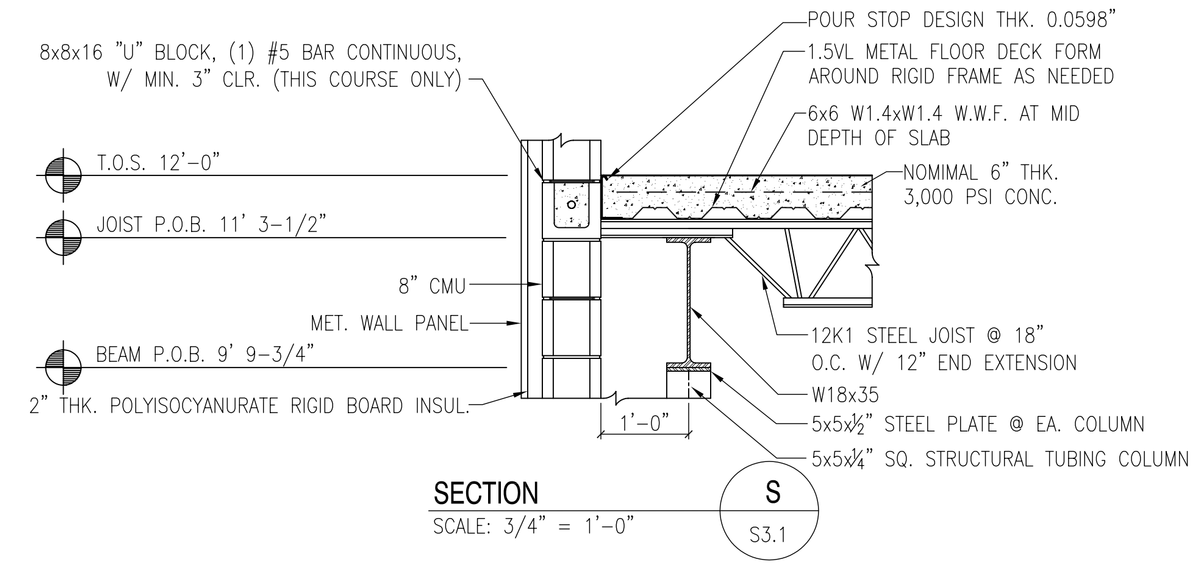

SECTION (S / S3.1)

SCALE: 3/4" = 1'-0"

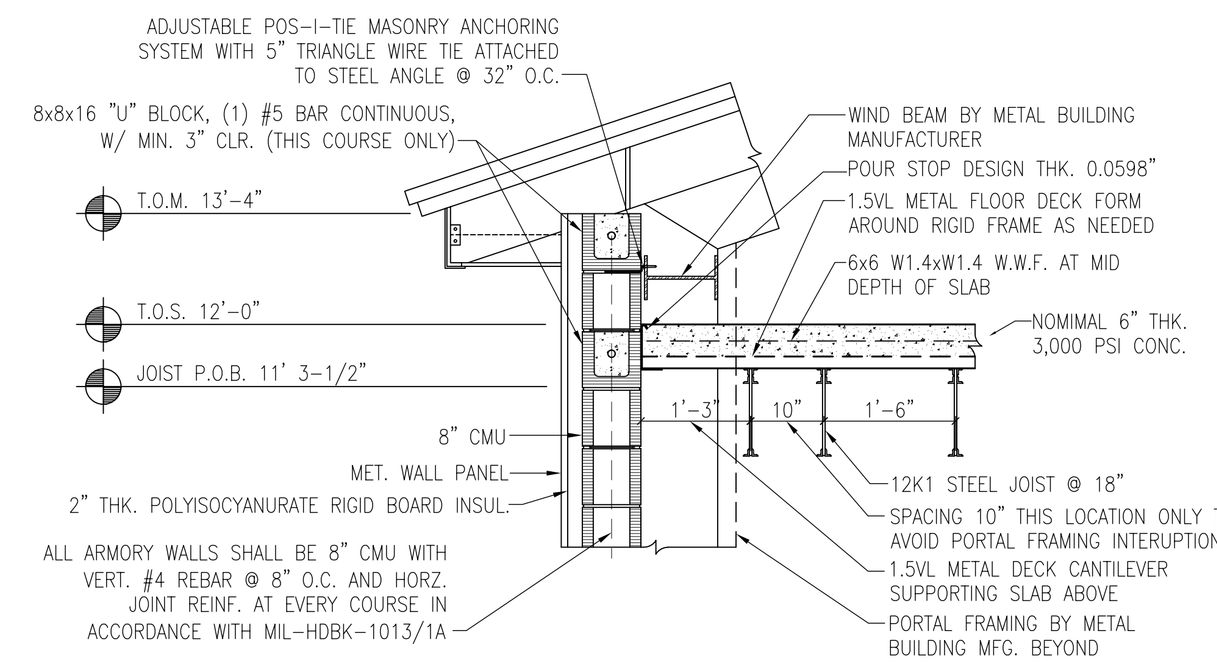

SECTION (T / S3.1)

SCALE: 3/4" = 1'-0"

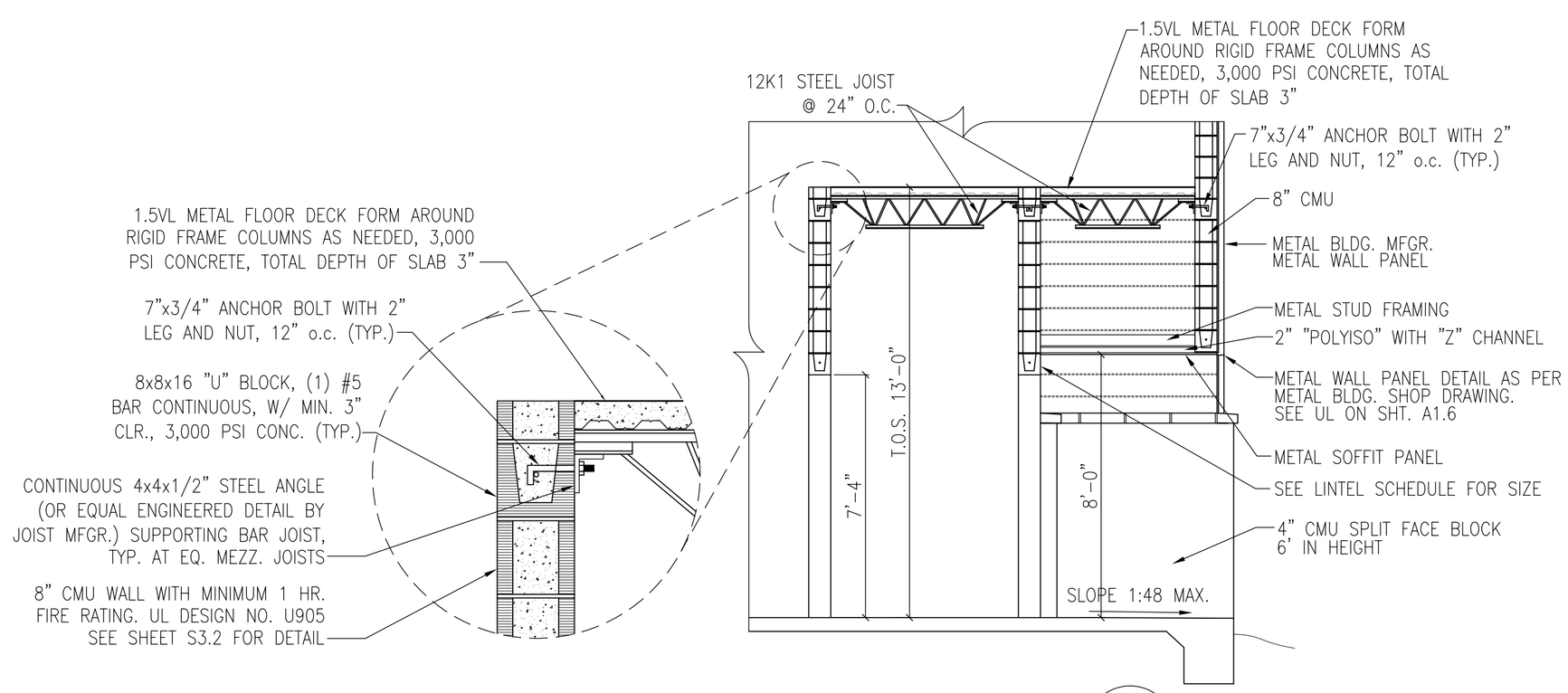

SECTION @ EQUIPMENT MEZZ. (V / S3.1)

N.T.S.

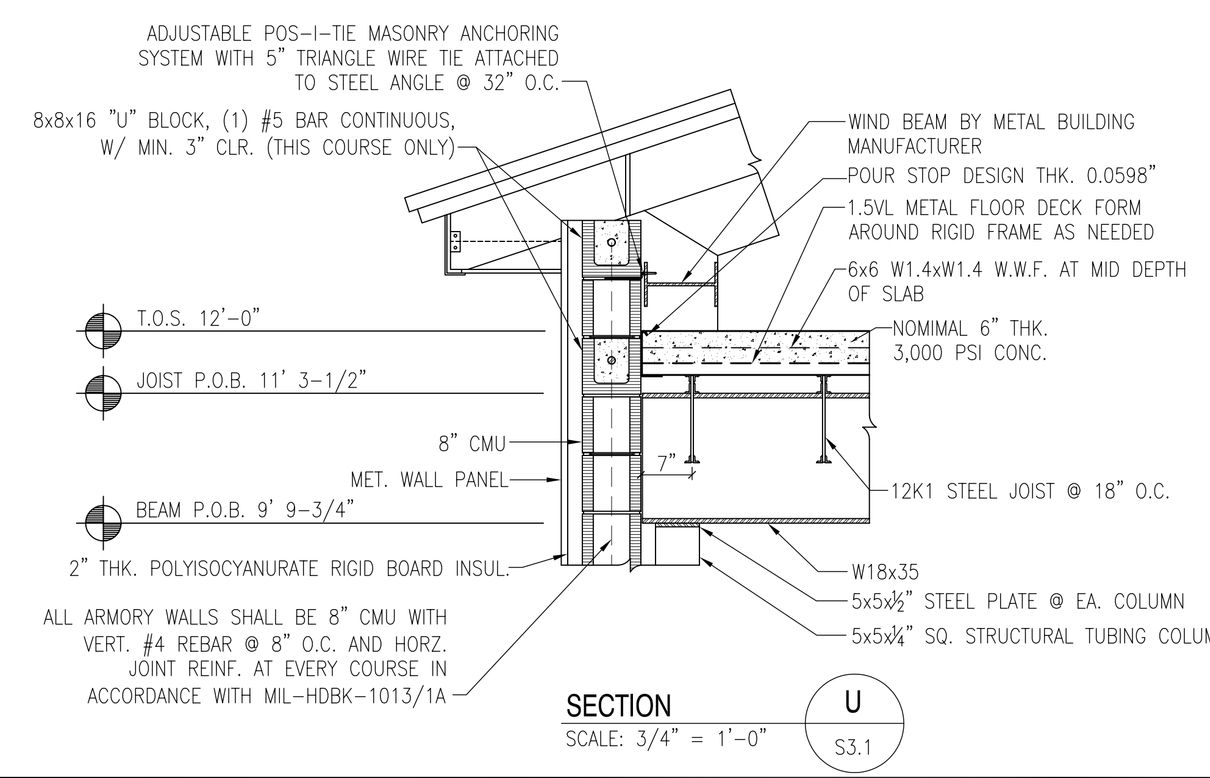

SECTION (U / S3.1)

SCALE: 3/4" = 1'-0"

APPR	DATE	DESCRIPTION	STM

NAVFAC

DAMMON ENGINEERING, INC.
CHIEF ENGINEER EMMETT DAMMON, P.E. — CHIEF ARCHITECT ROBERT WILTSE
1095 FLORIDA AVENUE
SLIDELL, LA 70458
(985) 649-5832
MAY 15, 2009

EMMETT G. DAMMON JR. REGISTERED PROFESSIONAL ENGINEER 9652 STATE OF MISSISSIPPI

DES: R. WILTSE | DRW: J. TIFFANY
REVIEWED BY: R. WILTSE
PM/DM: T. ARTRIP
CHIEF ENG/ARCH: P. DAMMON

DEPARTMENT OF THE NAVY
PT SOUTH ATLANTIC
JOHN C. STENNIS SPACE CENTER
NAVAL FACILITIES ENGINEERING COMMAND
NAVAL FACILITIES ENGINEERING COMMAND SOUTHEAST
NAVAL AIR STATION JACKSONVILLE MISSISSIPPI

SOF RIVERINE AND COMBATANT CRAFT OPERATIONS FACILITY - PRE-FINAL

ARMORY / EQ. MEZZ. STRUCTURAL FRAMING PLAN

CODE ID. NO. N4412	SIZE D
SCALE:	AS SHOWN
MAXIMO NO.	#####
STA. PROJ. NO.	P-210
WORK ORDER NO.	510247
CONSTR. CONTR. NO.	N62467-05-D-0096
NAVFAC DRAWING NO.	######-##-#-####
SHEET	71 OF 117

S3.1

DRAWFORM REVISION: 01 JAN 2009

REVDATE: