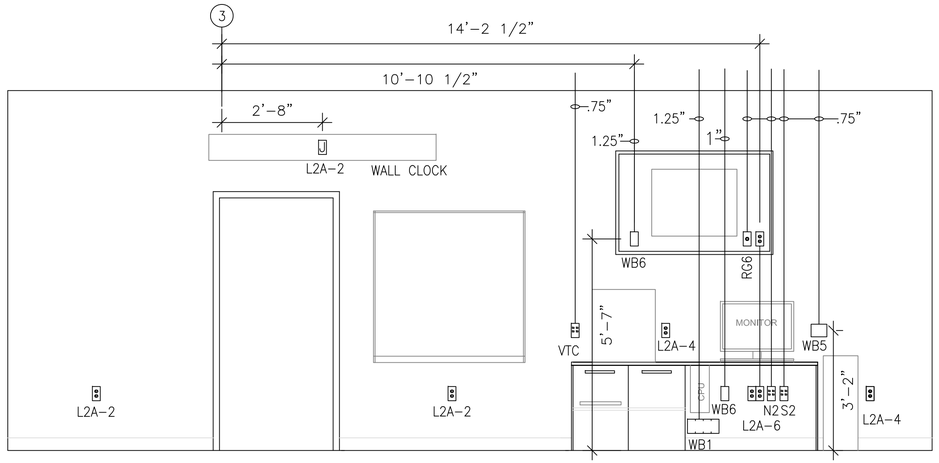

BRIEFING ROOM 203 SOUTH ELEVATION

1/2" = 1"-0"

0 1' 2'

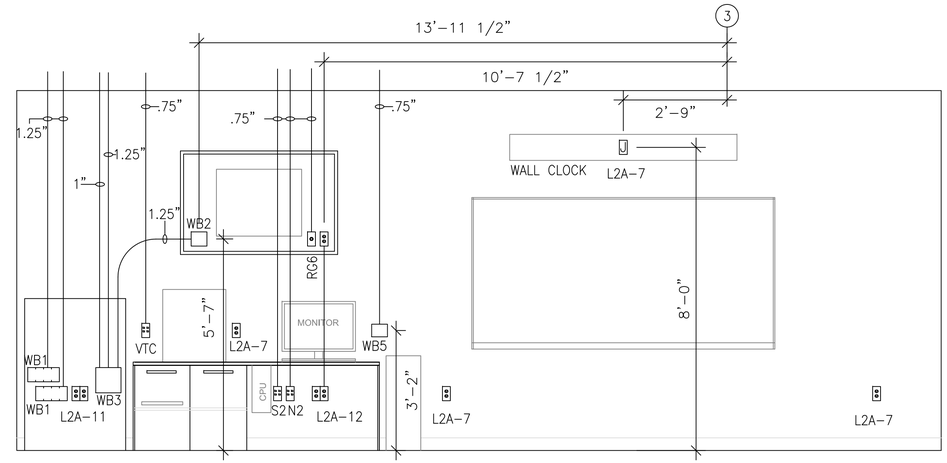

BRIEFING ROOM 203 NORTH ELEVATION

1/2" = 1"-0"

0 1' 2'

BACKBOX LEGEND	
SYMBOL	DESCRIPTION
WB1	4-GANG DEEP BACKBOX, FACEPLATE BY A/V
WB2	2-GANG DEEP BACKBOX WITH A/V TRIM RING
WB3	8"x8"x3.5" JUNCTION BOX, NO COVER PLATE
WB4	2-GANG DEEP BACKBOX, FACEPLATE BY A/V
WB5	SPECIALTY BOX, A/V PROVIDED, CONTRACTOR INSTALLED
WB6	1-GANG DEEP BACKBOX WITH A/V TRIM RING

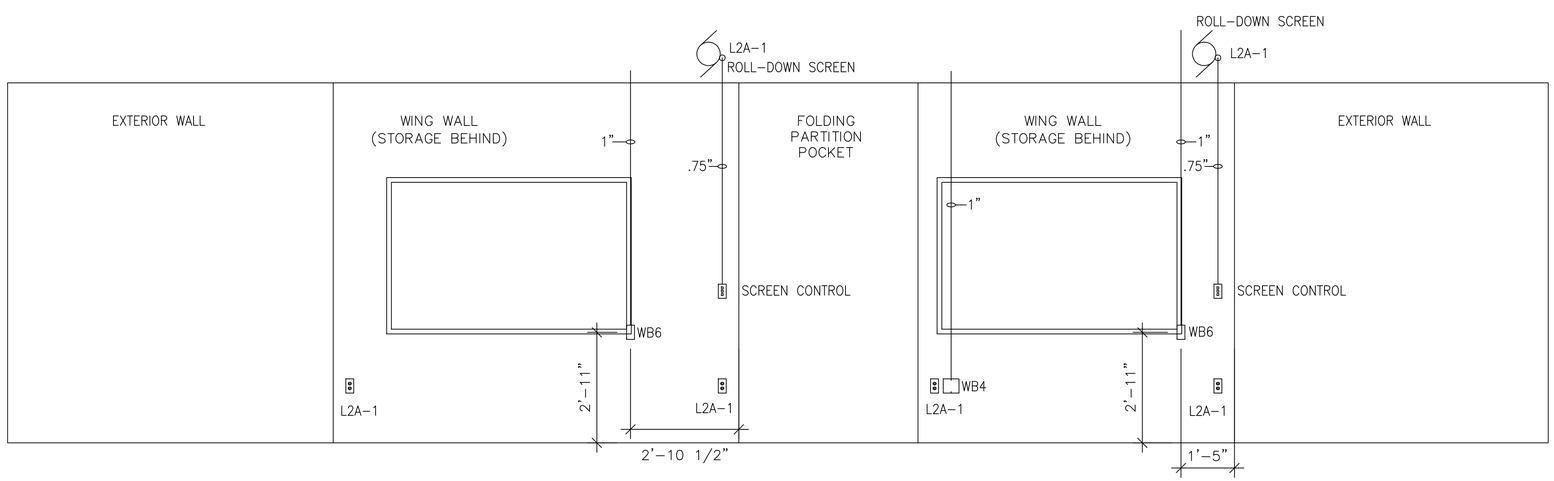

BRIEFING ROOM 203 WEST ELEVATION

1/2" = 1"-0"

0 1' 2'

GENERAL NOTES THIS SHEET:

ALL RACEWAYS AND BACKBOXES ARE PROVIDED BY ELECTRICAL CONTRACTOR UNLESS NOTED OTHERWISE. PROVIDE BUSHED ENDS ON ALL CONDUIT STUBBED INTO CEILING SPACE.

ALL A/V WIRING SHALL BE PROVIDED BY AUDIO VISUAL CONTRACTOR, NON-PLENUM RATED. ALL WIRING BY A/V CONTRACTOR SHALL BE SUPPORTED FROM STRUCTURE ABOVE, AND NOT LAID ON CEILING TILES.

WHERE DIMENSIONS ARE SHOWN, COORDINATE WITH PARTITION CONTRACTOR TO ACCOMPLISH ACCURATE INSTALLATION. WHERE NOT DIMENSIONED, MINOR ADJUSTMENTS AMY BE MADE TO LOCATIONS AS NEEDED, PROVIDED DEVICE DOES NOT CONFLICT WITH FURNITURE.

RECORD DRAWING
LETTER DATED
5-27-10

SYM	DESCRIPTION	DATE	APPR
	AS-BUILT REVISIONS	5-27-10	

NAVFAC

SCHLAFLY ENGINEERING LLC
121 SOUTH GENOIS STREET
NEW ORLEANS LA 70119
PHONE 504-415-3347
FAX 504-482-7943

M. KIMBALL SCHLAFLY, P.E.
LA REG 27699

SEPTEMBER 4, 2009

STATE OF LOUISIANA
M. KIMBALL SCHLAFLY
REG. No. 27699
REGISTERED PROFESSIONAL ENGINEER
IN
ELECTRICAL ENGINEERING
SEAL

DES: K. SCHLAFLY | DRW: K. SCHLAFLY
REVIEWED BY: R. WILTSE
PM/DM: T. ARTRIP
CHIEF ENG/ARCH: P. DAMMON

DEPARTMENT OF THE NAVY
NAVAL FACILITIES ENGINEERING COMMAND
IPT SOUTH ATLANTIC

NAVAL FACILITIES ENGINEERING COMMAND SOUTHEAST
NAVAL AIR STATION JACKSONVILLE
JOHN C. STENNIS SPACE CENTER MISSISSIPPI

SOF RIVERINE AND COMBATANT CRAFT OPERATIONS FACILITY

ELECTRICAL DETAILS

CODE ID. NO. N4412 | SIZE D
SCALE: AS SHOWN
MAXIMO NO. ######
STA. PROJ. NO. P-210
WORK ORDER NO. 510247
CONSTR. CONTR. NO. N62467-05-D-0096
NAVFAC DRAWING NO. 15026752
SHEET 105 OF 132

E1.7

DRAWFORM REVISION: 01 JAN 2009

REV/DATE: FILE NAME: C:\Schlafly ENGR\08010 SOF Riverine\Drawings\Elec\5-As-builts\E1.0.dwg LAYOUT NAME: E1.7 PLOTTED: Friday, May 28, 2010 - 2:58pm