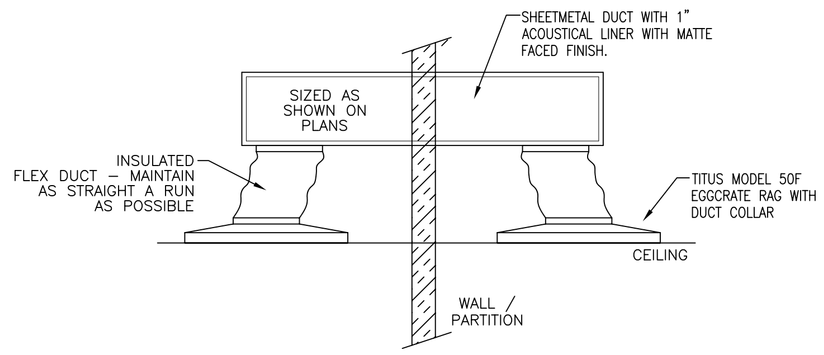

TRANSFER GRILL ASSEMBLY DETAIL (1 / M2.0)

SCALE: NONE

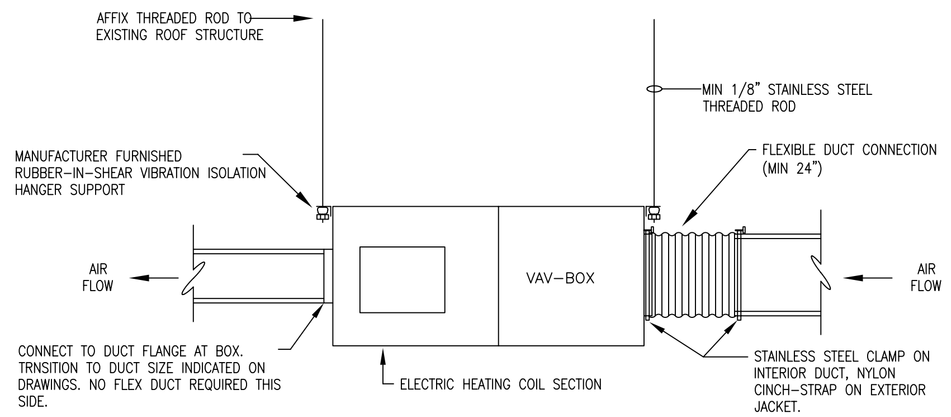

VAV BOX INSTALLATION DETAIL (2 / M2.0)

SCALE: NONE

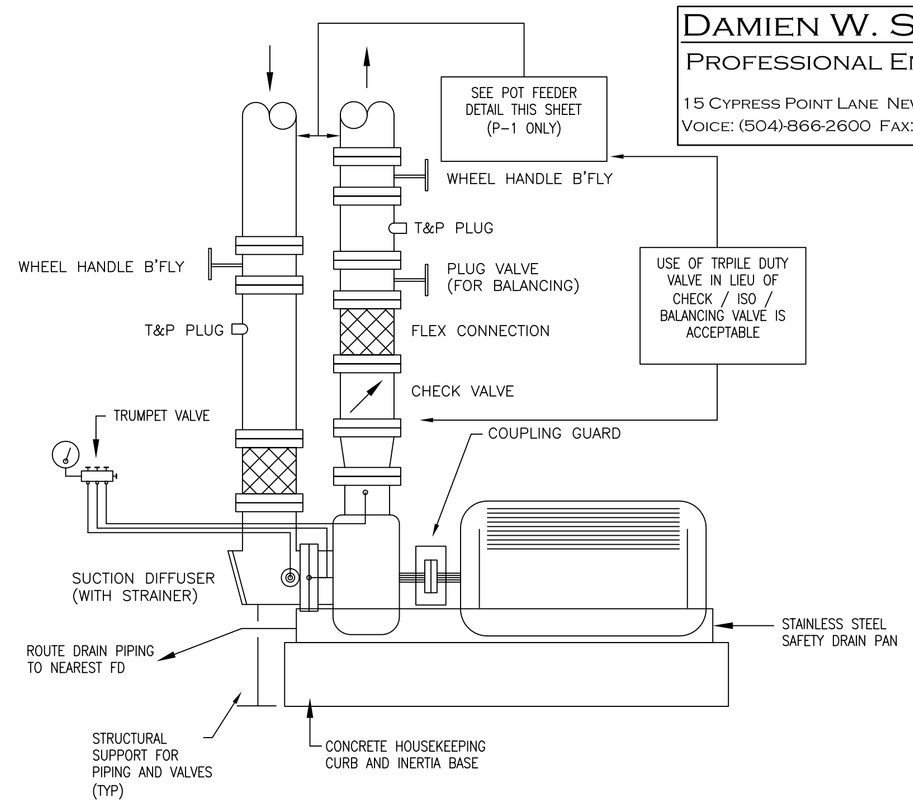

TYPICAL PUMP INSTALLATION DIAGRAM (3 / M2.0)

SCALE: NONE

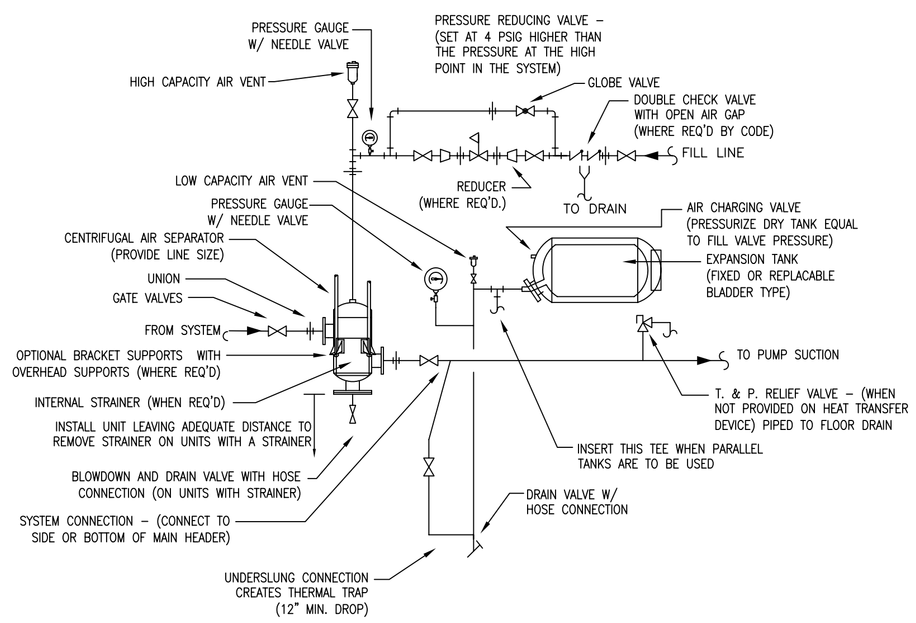

AIR SEPARATOR AND EXPANSION TANK DETAIL (4 / M2.0)

SCALE: NONE

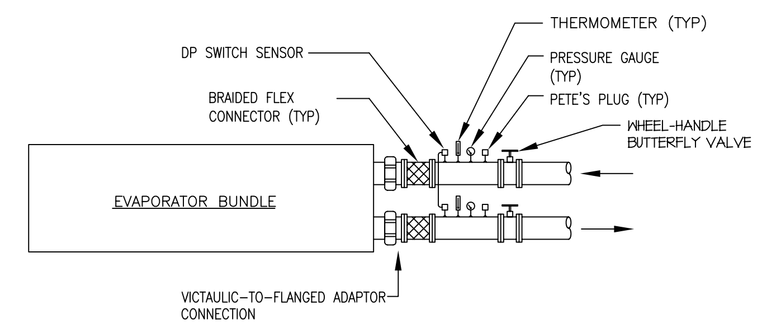

TYPICAL CHILLER CONNECTION DIAGRAM (5 / M2.0)

SCALE: NONE

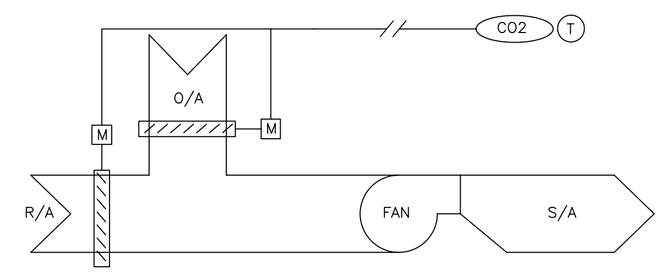

SEQUENCE OF OPERATION

ZONE CO2 SENSOR SHALL MEASURE THE ROOM AIR CONCENTRATION OF CARBON DIOXIDE. IF THE LEVEL OF CO2 SENSED IS LESS THAN THE SET POINT (ADJUSTABLE), THE OUTSIDE AIR DAMPER SHALL CLOSE AND RA DAMPER SHALL OPEN. IF THE CO2 CONCENTRATION IS ABOVE SETPOINT, THE OUTSIDE AIR DAMPER SHALL OPEN AND RA DAMPER SHALL CLOSE. THE DAMPERS SHALL MODULATE IN 5% FLOW INCREMENTS BETWEEN MIN AND MAX POSITIONS, AND THE DEMAND CONTROL VENTILATION SEQUENCE SHALL SAMPLE / CYCLE EVERY 10 MINUTES TO ELIMINATE INSTANTANEOUS HUNTING OF THE DAMPERS.

WHEN UNIT IS OFF, THE OUTSIDE AIR AND RA DAMPERS SHALL CLOSE FULLY. UPON UNIT STARTUP, THE OUTSIDE AIR DAMPER SHALL OPEN TO A MINIMUM CFM SETPOINT OF 20% OF FULL (MAX) FLOW AND RA DAMPER SHALL OPEN TO MAX FLOW (100%). ONCE OPERATING FOR A MINIMUM OF 10 MINUTES, THE DEMAND CONTROL VENTILATION SEQUENCE SHALL BEGIN.

DCV CONTROL SEQUENCE (6 / M2.0)

SCALE: NONE

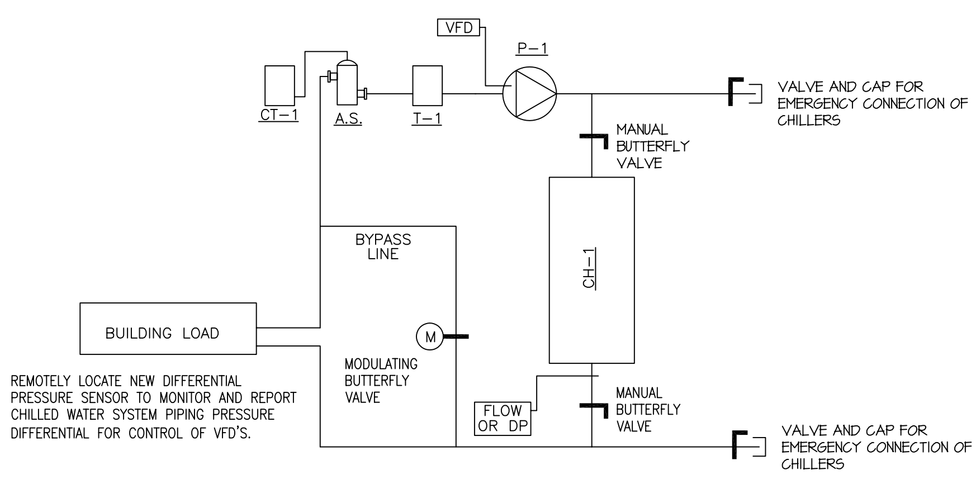

CHILLED WATER FLOW DIAGRAM (7 / M2.0)

SCALE: NONE

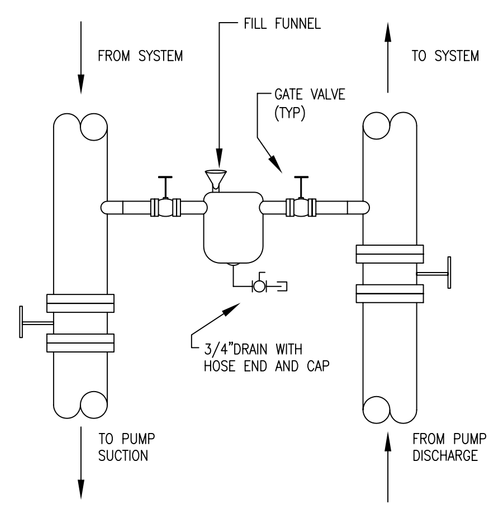

TYPICAL POT FEEDER INSTALLATION DIAGRAM (8 / M2.0)

SCALE: NONE

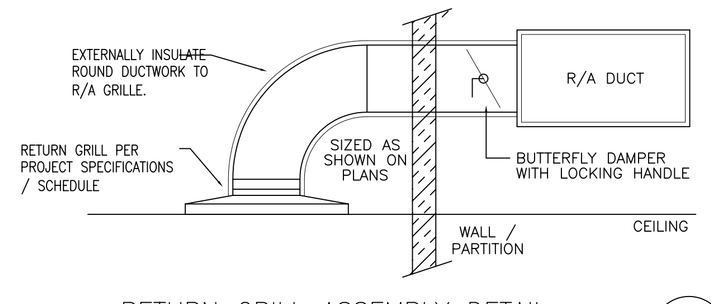

RETURN GRILL ASSEMBLY DETAIL (9 / M2.0)

SCALE: NONE

DAMIEN W. SERAUSKAS, P.E.
PROFESSIONAL ENGINEERING SERVICES
15 CYPRESS POINT LANE NEW ORLEANS, LA 70131
VOICE: (504)-866-2600 FAX: (504)-218-8480

DESCRIPTION	DATE	APPR

NAVFAC

DAMMON ENGINEERING, INC.
CHIEF ENGINEER EMMETT DAMMON, P.E. — CHIEF ARCHITECT ROBERT WILTSE
1095 FLORIDA AVENUE
SLIDELL, LA 70458
(985) 649-5832

MAY 06, 2009

STATE OF LOUISIANA — DAMIEN W. SERAUSKAS REG. No. 28519 REGISTERED PROFESSIONAL ENGINEER IN MECHANICAL ENGINEERING — SEAL

REVIEWED BY: D. SERAUSKAS
PM/DM: T. ARTRIP
CHIEF ENG/ARCH: D.SERAUSKAS

DEPARTMENT OF THE NAVY
NAVAL FACILITIES ENGINEERING COMMAND
NAVAL FACILITIES ENGINEERING COMMAND SOUTHEAST
NAVAL AIR STATION JACKSONVILLE
JPT SOUTH ATLANTIC
MISSISSIPPI
JOHN C. STENNIS SPACE CENTER
SOF RIVERINE AND COMBATANT CRAFT OPERATIONS FACILITY

MECHANICAL DETAILS AND DIAGRAMS

CODE ID. NO. N4412 — SIZE D
SCALE: AS NOTED
MAXIMO NO. #####
STA. PROJ. NO. #-####
WORK ORDER NO. #####
CONSTR. CONTR. NO. N62467-05-D-0096
NAVFAC DRAWING NO. #####-##-#-###
SHEET ### OF ###

M3.0

DRAWFORM REVISION: 01 JAN 2009

REVDATE: FILE NAME: C:\Stennis Riverine Facility\Stennis Mech Master.dwg LAYOUT NAME: M3.0 PLOTTED: Wednesday, May 06, 2009 - 9:35am