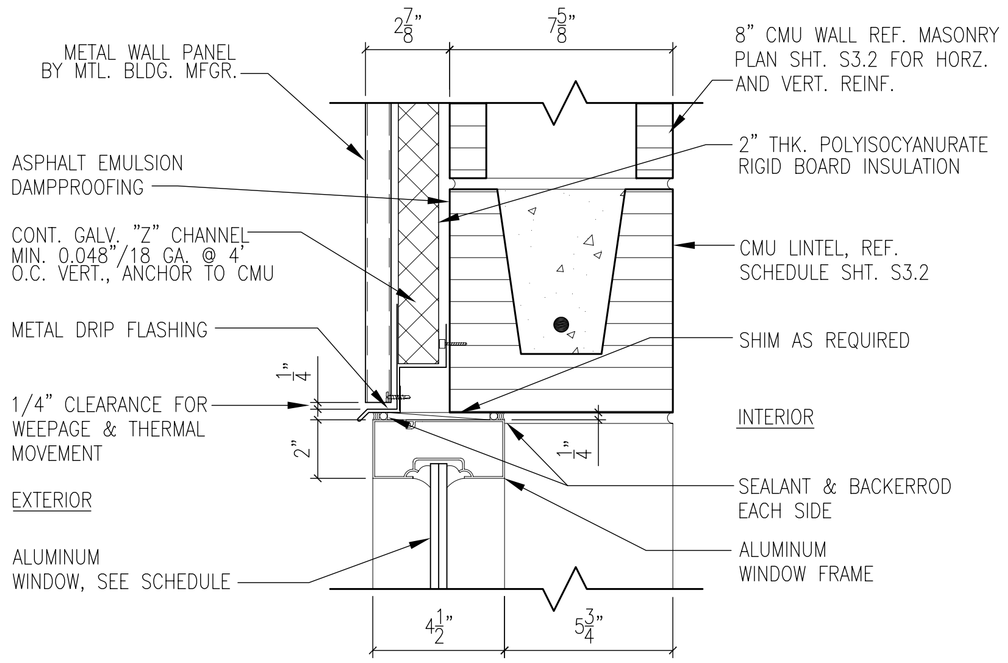

2ND FLOOR EXTERIOR WINDOW HEAD DETAIL (20)

SCALE: 3"= 1'-0" — A1.18

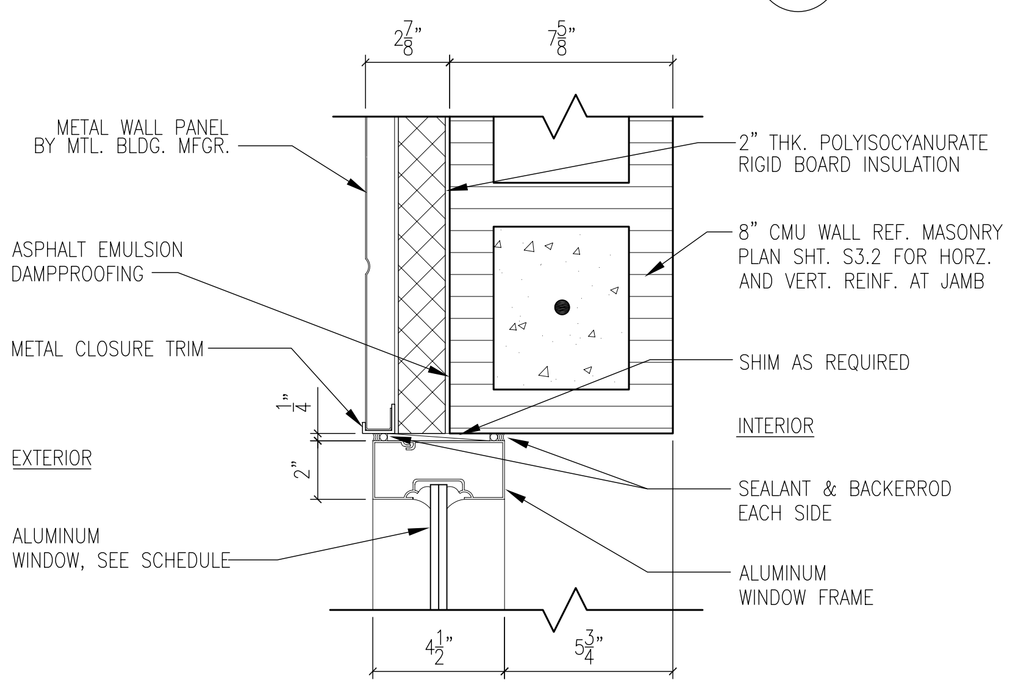

2ND FLOOR EXTERIOR WINDOW JAMB DETAIL (21)

SCALE: 3"= 1'-0" — A1.18

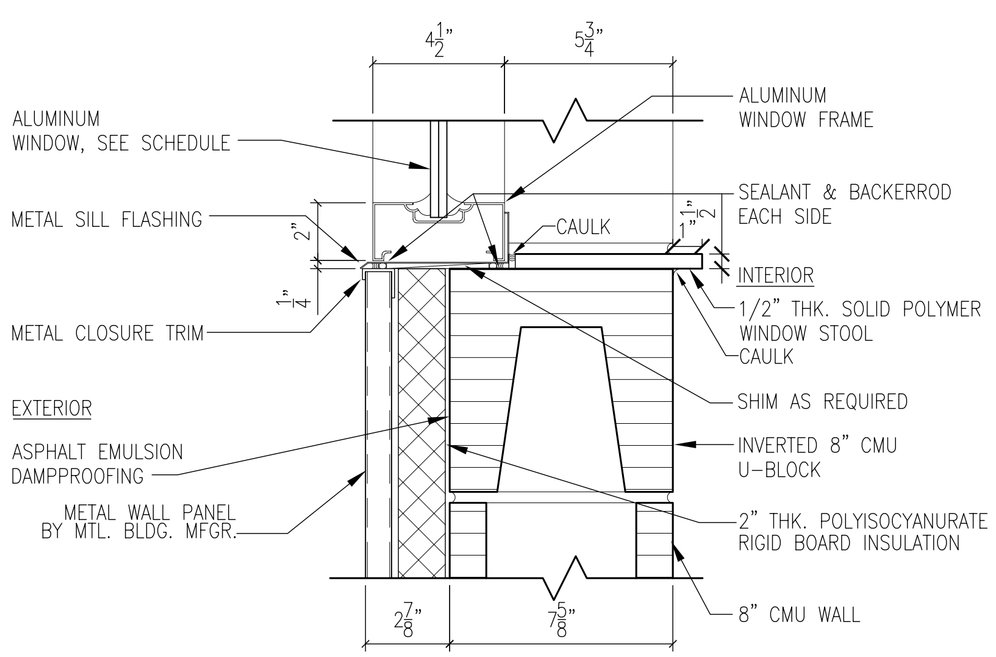

2ND FLOOR EXTERIOR WINDOW SILL DETAIL (22)

SCALE: 3"= 1'-0" — A1.18

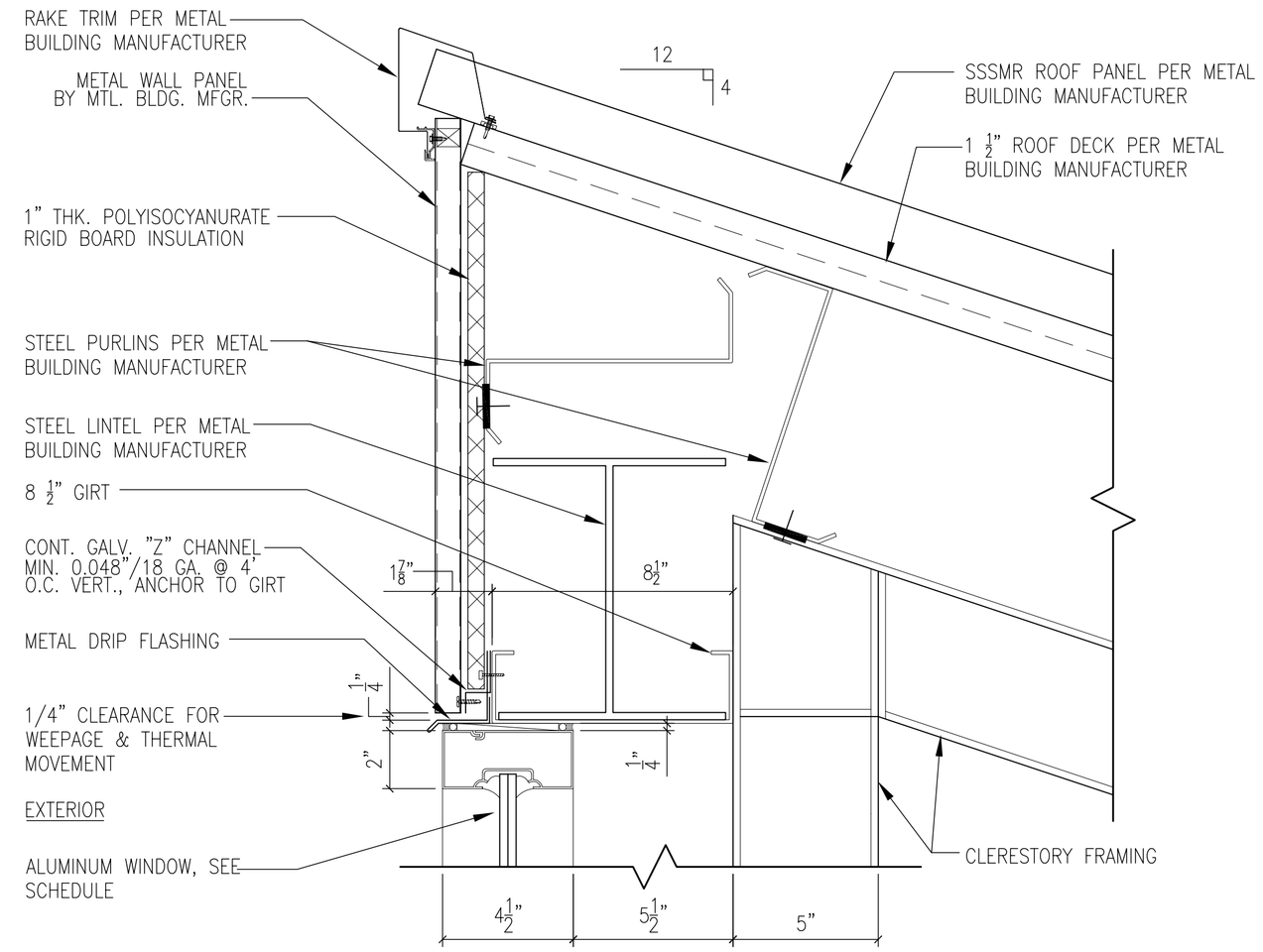

2ND FLOOR-CLERESTORY EXTERIOR WINDOW HEAD DETAIL (23)

SCALE: 3"= 1'-0" — A1.18

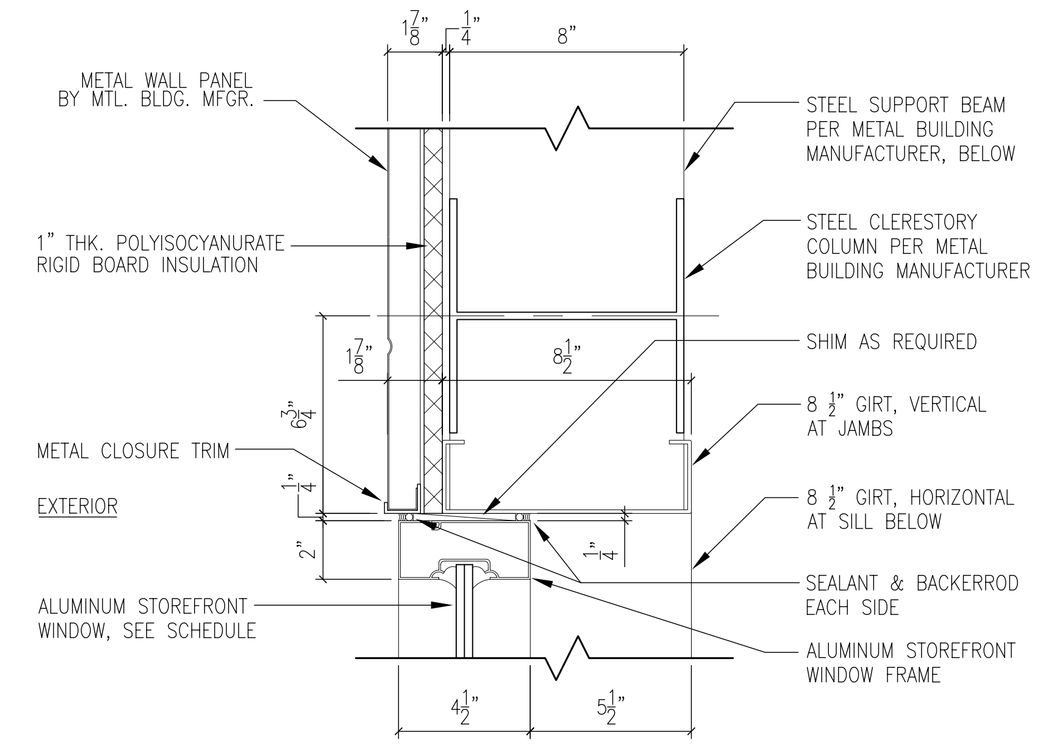

2ND FLOOR-CLERESTORY EXTERIOR WINDOW JAMB DETAIL (24)

SCALE: 3"= 1'-0" — A1.18

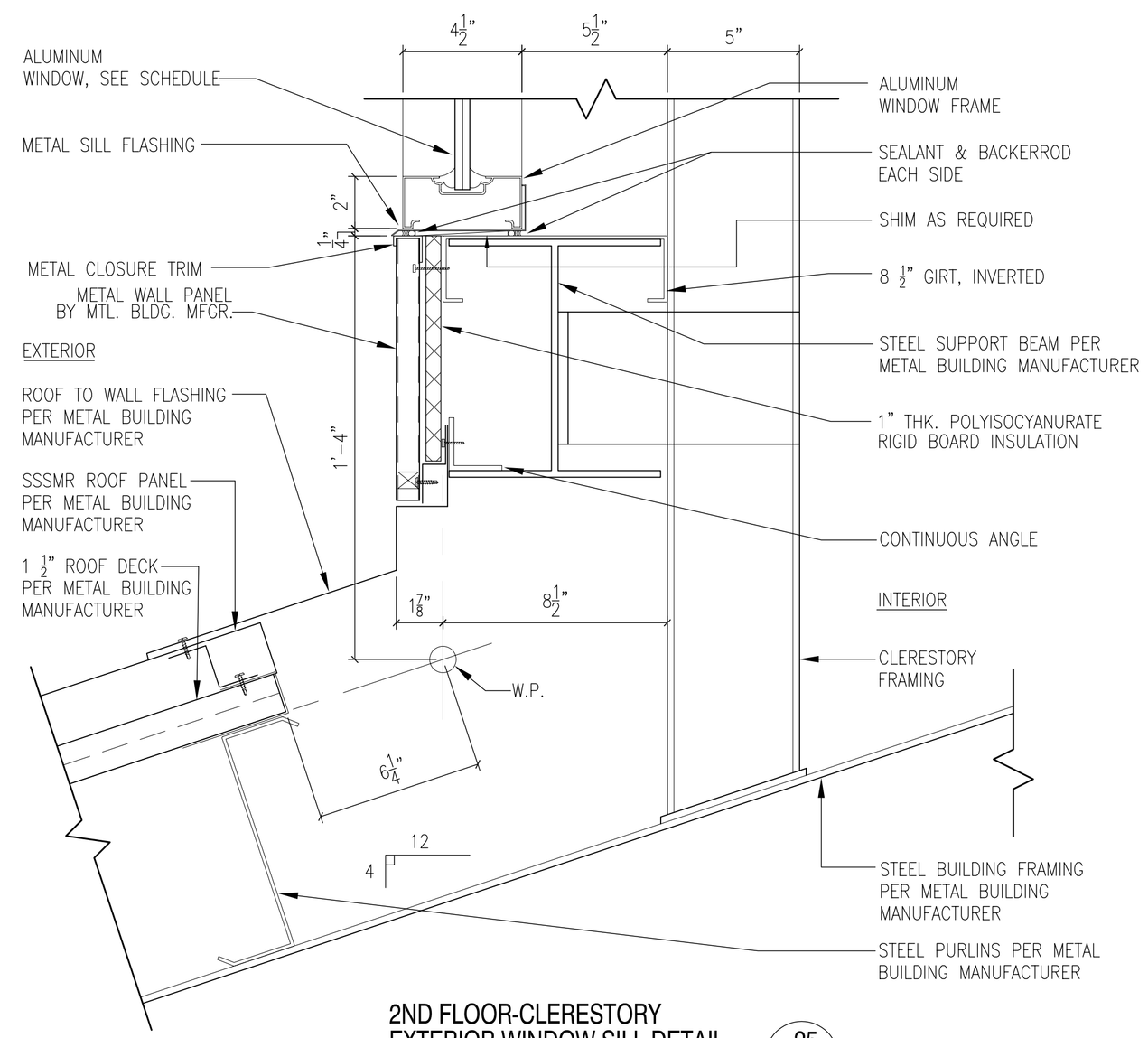

2ND FLOOR-CLERESTORY EXTERIOR WINDOW SILL DETAIL (25)

SCALE: 3"= 1'-0" — A1.18

6" 3" 0 1'

DATE	DESCRIPTION	STM	DATE	APPR

NAVFAC

DAMMON ENGINEERING, INC.
CHIEF ENGINEER EMMETT DAMMON, P.E. — CHIEF ARCHITECT ROBERT WILTSE
1095 FLORIDA AVENUE
SLIDELL, LA 70458
(985) 649-5832
SEPTEMBER 4, 2009

EMMETT G. DAMMON — LICENSED PROFESSIONAL ENGINEER 9652 — STATE OF MISSISSIPPI

ROBERT LEE WILTSE — REG. NO. 2738 — STATE OF LOUISIANA — REGISTERED ARCHITECT

DES: R. WILTSE | DRW: J. TIFFANY
REVIEWED BY: R. WILTSE
PM/DM: T. ARTRIP
CHIEF ENG/ARCH. P. DAMMON

DEPARTMENT OF THE NAVY
NAVAL FACILITIES ENGINEERING COMMAND SOUTHEAST
NAVAL FACILITIES ENGINEERING COMMAND
NAVAL AIR STATION JACKSONVILLE
MISSISSIPPI
IPT GULF COAST
JOHN C. STENNIS SPACE CENTER

SOF RIVERINE AND COMBATANT CRAFT OPERATIONS FACILITY - PRE-FINAL

BLDG. 2440/2441 DOOR DETAILS

CODE ID. NO. N4412	SIZE D
SCALE:	AS SHOWN
MAXIMO NO.	#####
STA. PROJ. NO.	P-210
WORK ORDER NO.	510247
CONSTR. CONTR. NO.	N62467-05-D-0096
NAVFAC DRAWING NO.	15026699
SHEET	52 OF 132

A1.22

DRAWFORM REVISION: 01 JAN 2009

REVDATE: