MATCHLINE SEE SHT C6.2 | MATCHLINE SEE SHT C6.2 | MATCHLINE SEE SHT C6.2

C.L. ELEV. OF WATER LINE=7.5' IN THIS LOCATION TO ALLOW REQD. COVER UNDER DRAINAGE SWALE

2-1/2"" WATER METER CONNECTED TO FACILITIES EMCS & PROVIDE 3-VALVE LOCKAGE BY-PASS. SEE DETAIL THIS SHT.

8"BACK FLOW PREVENTER W/ DBL DECT. CHECK AND HEATED ENCLOSURE. SEE DETAIL ON SHEET C6.5.

2 1/2" WATER LINE

2 1/2" BACK FLOW PREVENTER

6" FIRE HYDRANT, SEE DETAIL SHT. C6.5 LOCATED 5' OFF ROAD

2 1/2" GATE VALVE

8" POST INDICATOR VALVE WITH CHAIN AND LOCK, SEE DETAIL SHT. S4.1

PW

UTILITY PLAN PART 2

SCALE: 1"=30'-0"

PLAN NORTH

30' 20' 0 30' 60' 90'

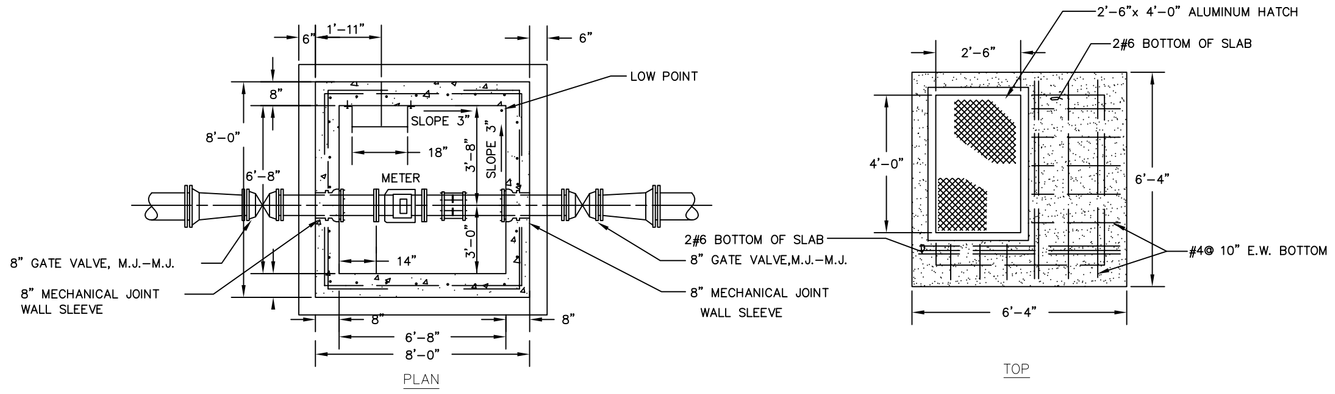

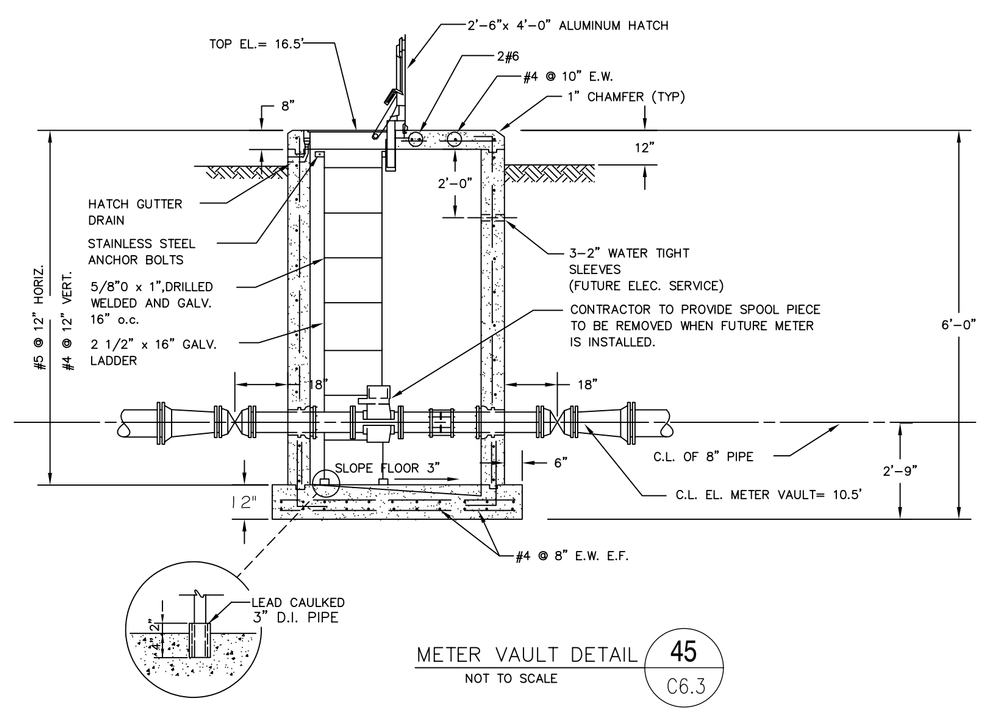

METER VAULT DETAIL 45 / C6.3

NOT TO SCALE

LEGEND

SYMBOL	DESCRIPTION
—S——S——S—	SANITARY SEWER
—PW——PW—	COLD WATER (POTABLE)
— — — — —	EXISTING SEWER
—F——F——F—	FIRE PROTECTION

DATE	DESCRIPTION	APPR
11-6-09	REVISED AS PER UPS COMMENTS 9 OCTOBER 2009	RW

NAVFAC

DAMMON ENGINEERING, INC.
CHIEF ENGINEER EMMETT G. DAMMON, P.E. | CHIEF ARCHITECT ROBERT WILTSE
1095 FLORIDA AVENUE
SLIDELL, LA 70458
(985) 649-5832
SEPTEMBER 4, 2009

EMMETT G. DAMMON LICENSED PROFESSIONAL ENGINEER 9652 STATE OF MISSISSIPPI

ROBERT LEE WILTSE REG. NO. 2736 STATE OF LOUISIANA REGISTERED ARCHITECT

DES: C. DAMMON | DRW: J. TIFFANY
REVIEWED BY: R. WILTSE
PM/DM: T. ARTRIP
CHIEF ENG/ARCH. P. DAMMON

DEPARTMENT OF THE NAVY
NAVAL FACILITIES ENGINEERING COMMAND
NAVAL FACILITIES ENGINEERING COMMAND SOUTHEAST
IPT GULF COAST
NAVAL AIR STATION JACKSONVILLE
JOHN C. STENNIS SPACE CENTER
MISSISSIPPI

SOF RIVERINE AND COMBATANT CRAFT OPERATIONS FACILITY - PRE-FINAL

UTILITY PLAN PART 2

CODE ID. NO. N4412	SIZE D
SCALE:	AS SHOWN
MAXIMO NO.	######
STA. PROJ. NO.	P-210
WORK ORDER NO.	510247
CONSTR. CONTR. NO.	N62467-05-D-0096
NAVFAC DRAWING NO.	15026674
SHEET	27 OF 132

C6.3

DRAWFORM REVISION: 01 JAN 2009

REVDATE: