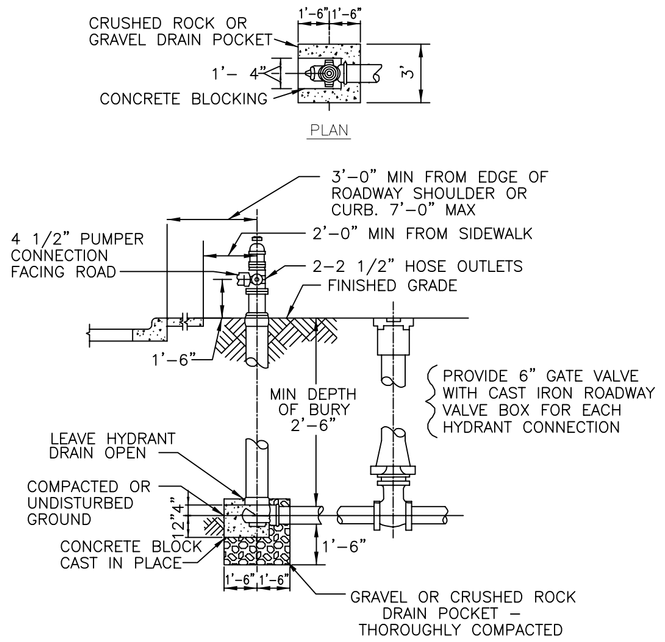

FIRE HYDRANT 46 / C6.1
NOT TO SCALE

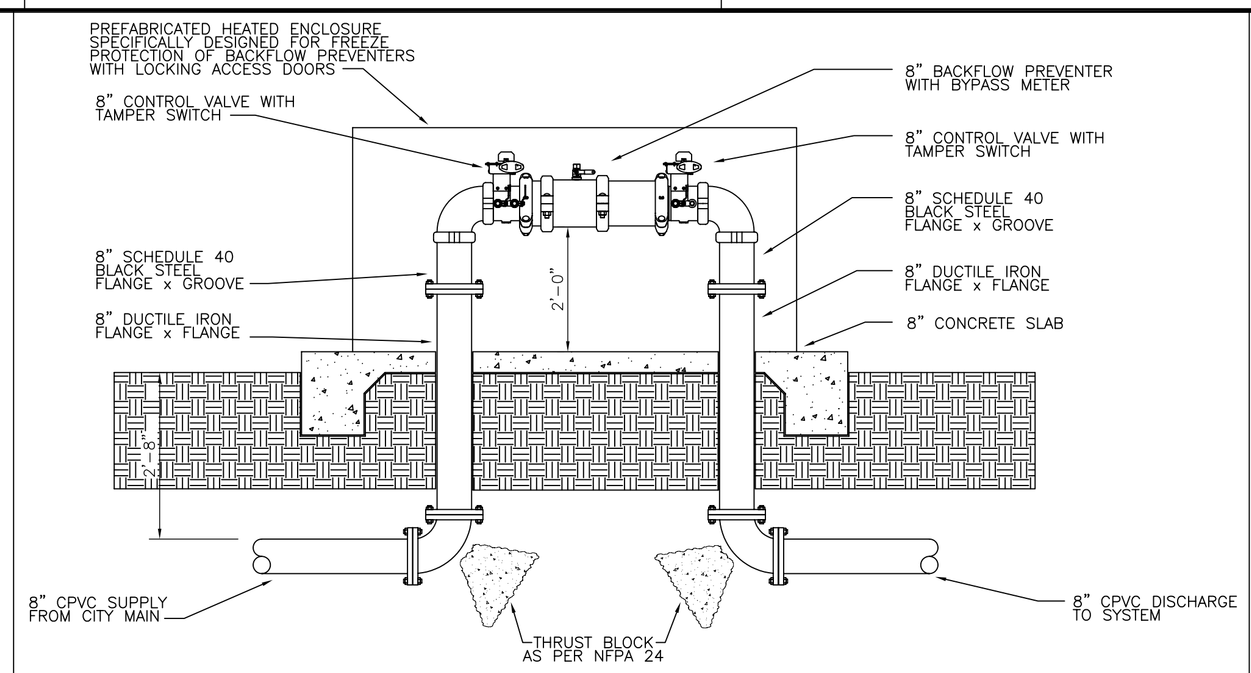

BACKFLOW PREVENTER DETAIL 47 / C6.1
NOT TO SCALE

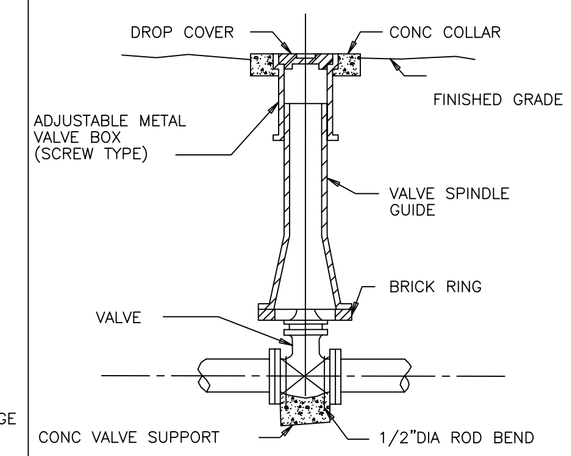

VALVE BOX 48 / C6.1
NOT TO SCALE

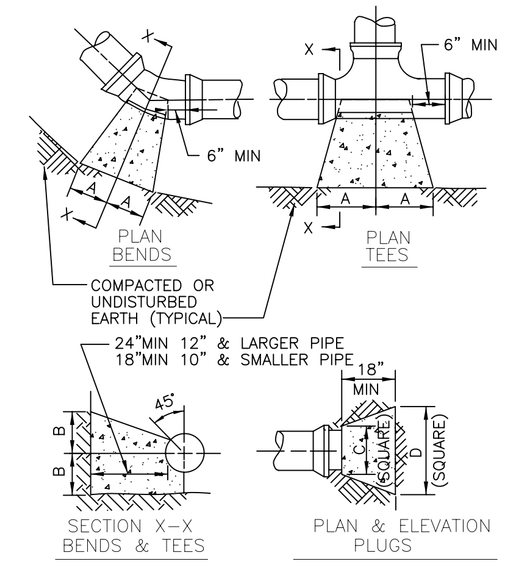

SIZE	1/4 BENDS		1/8 BENDS		1/16 BENDS		TEES		PLUGS	
	A	B	A	B	A	B	A	B	C	D
6"	16"	10"	9"	10"	6"	8"	10"	12"	10"	21"
8"	22"	13"	12"	13"	8"	10"	13"	16"	12"	29"
10"	26"	17"	14"	17"	10"	13"	16"	20"	14"	36"
12"	29"	21"	16"	21"	11"	16"	18"	24"	16"	41"
14"	35"	24"	19"	24"	12"	20"	22"	27"	18"	48"
16"	38"	27"	21"	27"	12"	24"	24"	30"	20"	54"

THRUST BLOCKS 50 / C6.1
NOT TO SCALE

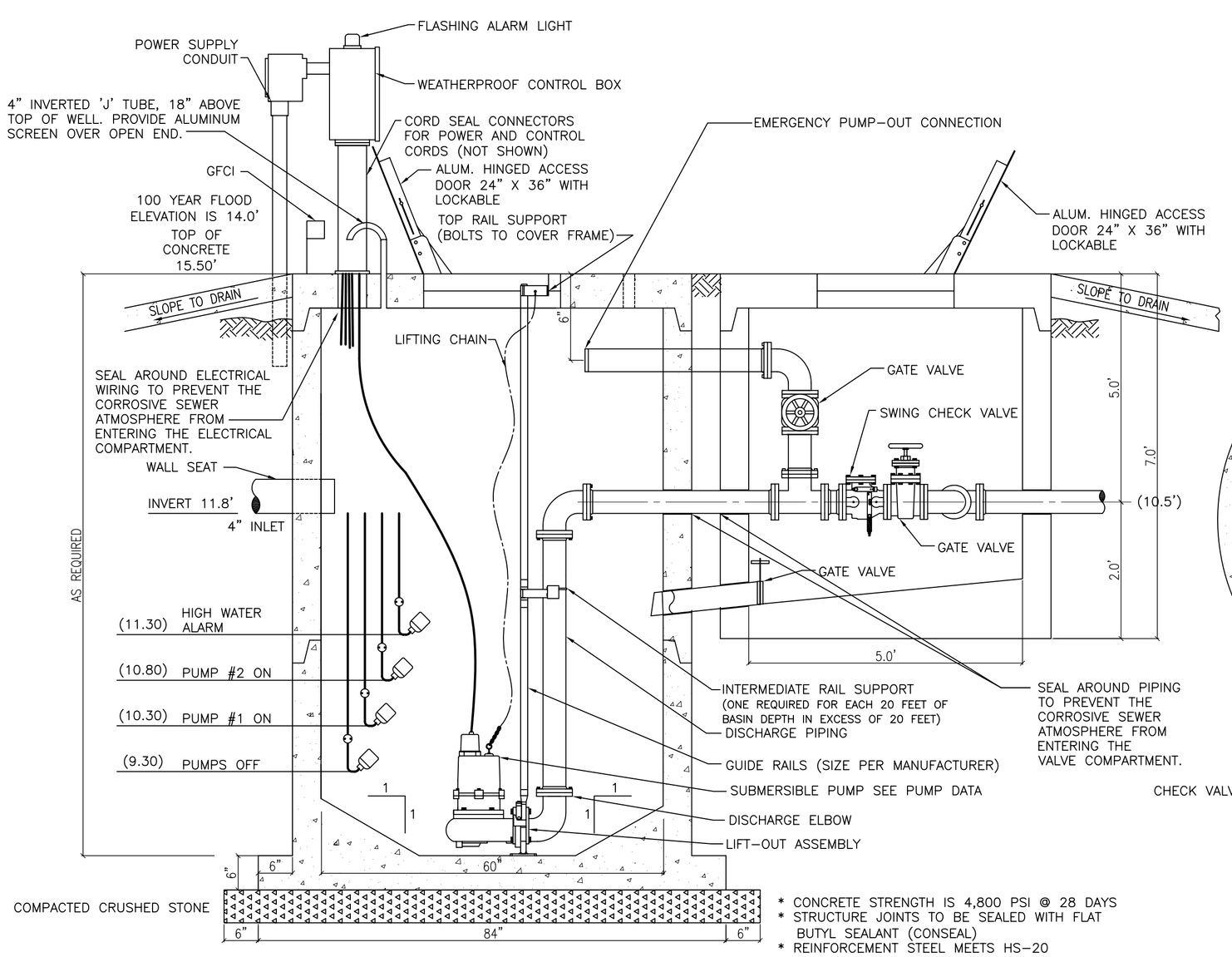

PUMP DATA
DUPLEX GRINDER PUMPS
38 G.P.M. @ 85 T.D.H. EACH
WITH 2 H.P. 3750 R.P.M. MOTORS

* CONCRETE STRENGTH IS 4,800 PSI @ 28 DAYS
* STRUCTURE JOINTS TO BE SEALED WITH FLAT BUTYL SEALANT (CONSEAL)
* REINFORCEMENT STEEL MEETS HS-20 LOADING REQUIREMENTS

NOTE:
1. CALC FOR SIZING:
PUMP 20 GAL/EMPLOYEE
OCCUPANT LOAD 95 EMPLOYEES
2000 GAL/DAY 4.2 GAL/MIN
PUMP + ADD IN 30 GAL/MIN FROM GREASE
THEN X 10% = 38 GAL/MIN
2. REFER TO LIFT STATION SPECIFICATION FOR ADDITIONAL REQUIREMENTS.

DUPLEX LIFT STATION DETAIL 51 / C6.1
NOT TO SCALE

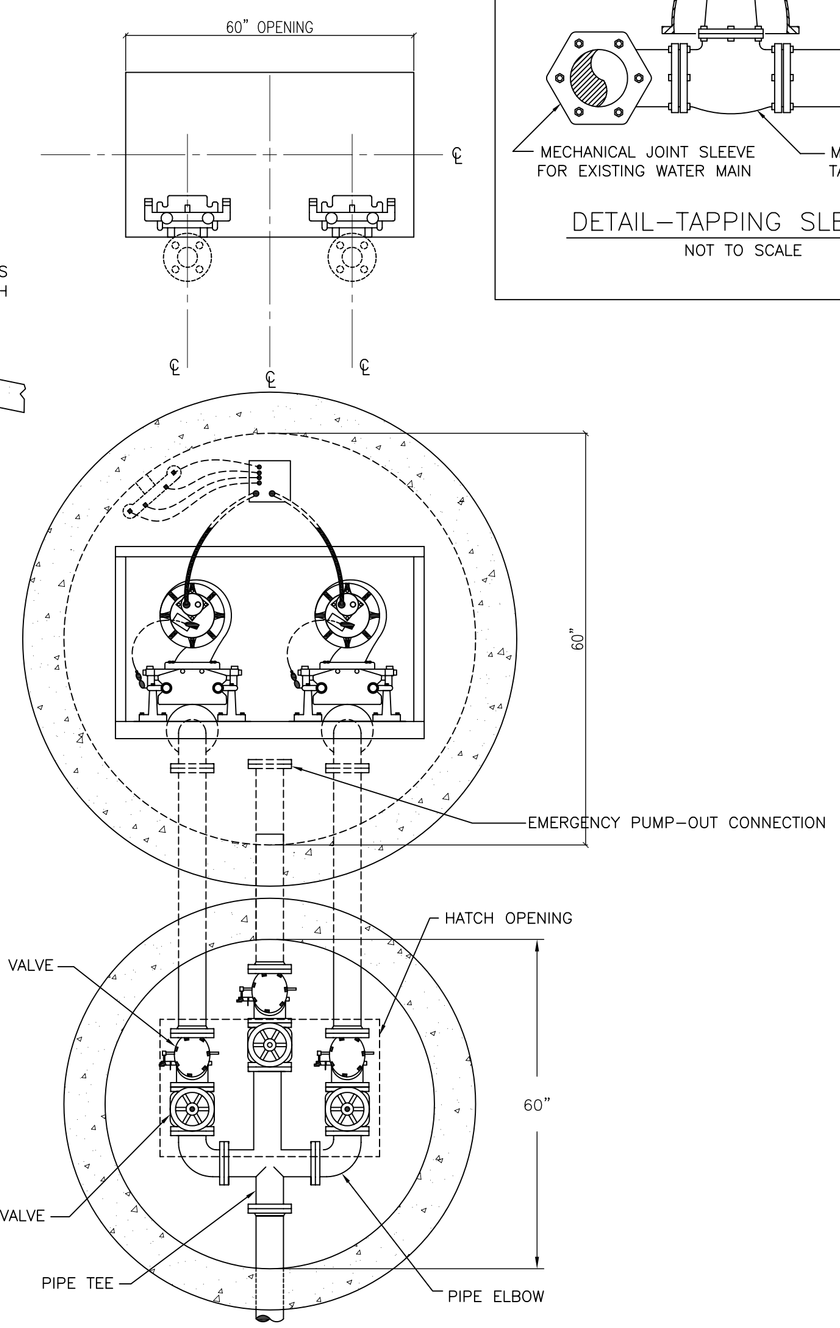

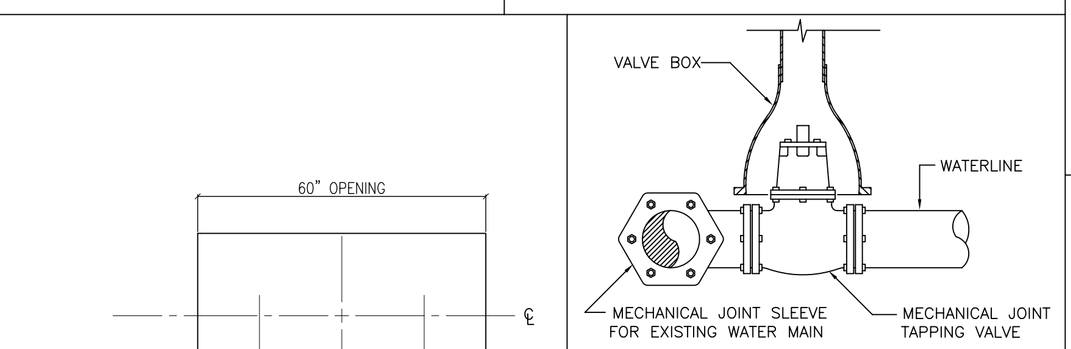

DETAIL-TAPPING SLEEVE 49 / C6.1
NOT TO SCALE

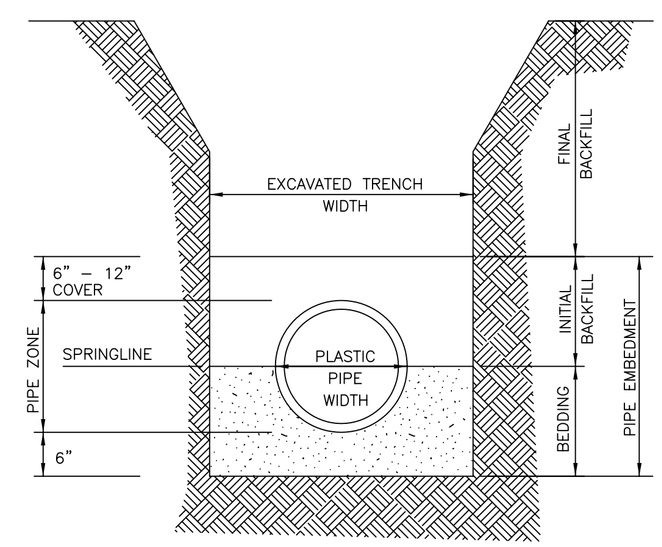

NOTE: PROVIDE BEDDING IN ACCORDANCE WITH THE SPECIFICATIONS.

TRENCH FOR PLASTIC PIPE 52 / C6.1
NOT TO SCALE

STM	DESCRIPTION	DATE	APPR
	REVISED AS PER UFC COMMENTS 9 OCTOBER 2009	11-6-09	RW

NAVFAC

DAMMON ENGINEERING, INC.
CHIEF ENGINEER EMMETT DAMMON, P.E. — CHIEF ARCHITECT ROBERT WILTSE
1095 FLORIDA AVENUE
SLIDELL, LA 70458
(985) 649-5832
SEPTEMBER 4, 2009

EMMETT G. DAMMON LICENSED PROFESSIONAL ENGINEER 9652 STATE OF MISSISSIPPI

DES: C. DAMMON | DRW: J. TIFFANY
REVIEWED BY: R. WILTSE
PM/DM: T. ARTRIP
CHIEF ENG/ARCH. P. DAMMON

DEPARTMENT OF THE NAVY
NAVAL FACILITIES ENGINEERING COMMAND
NAVAL FACILITIES ENGINEERING COMMAND SOUTHEAST
NAVAL AIR STATION JACKSONVILLE
PT GULF COAST — JOHN C. STENNIS SPACE CENTER — MISSISSIPPI

SOF RIVERINE AND COMBATANT CRAFT OPERATIONS FACILITY - PRE-FINAL

UTILITY DETAILS

ROBERT LEE WILTSE REG. NO. 27738 STATE OF LOUISIANA REGISTERED ARCHITECT

CODE ID. NO. N4412	SIZE D
SCALE:	AS SHOWN
MAXIMO NO.	######
STA. PROJ. NO.	P-210
WORK ORDER NO.	510247
CONSTR. CONTR. NO.	N62467-05-D-0096
NAVFAC DRAWING NO.	15026676
SHEET	29 OF 132

C6.5

DRAWFORM REVISION: 01 JAN 2009

REVDATE: