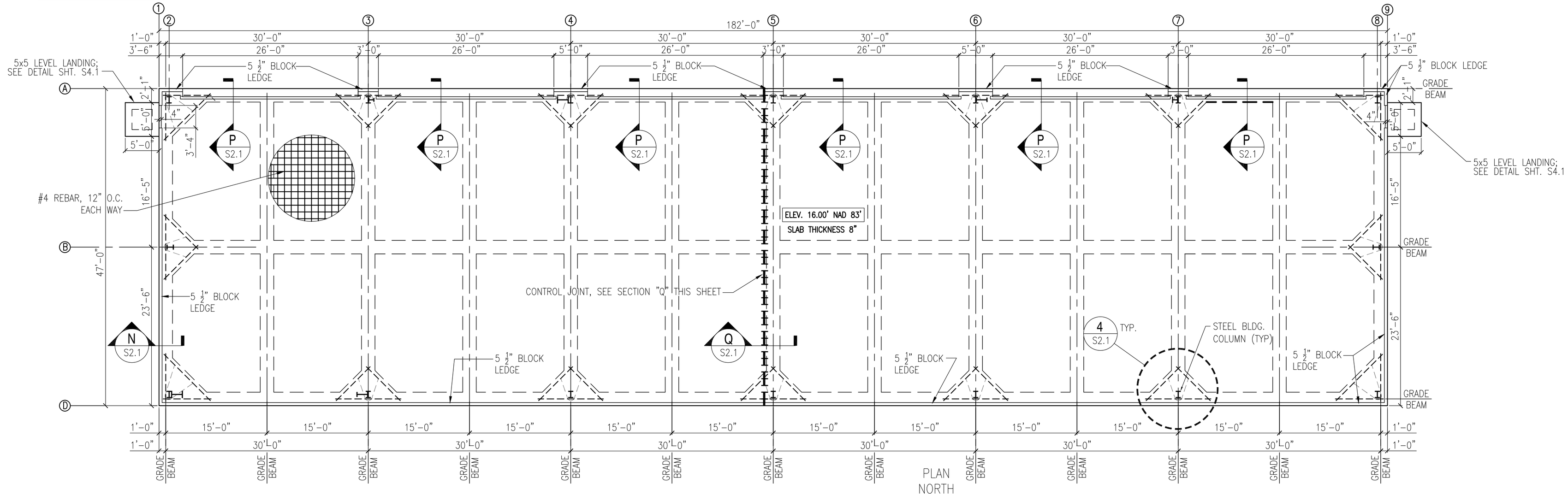

BOAT STORAGE BLDG. 2442 FOUNDATION PLAN

SCALE: ⅛"=1'-0"

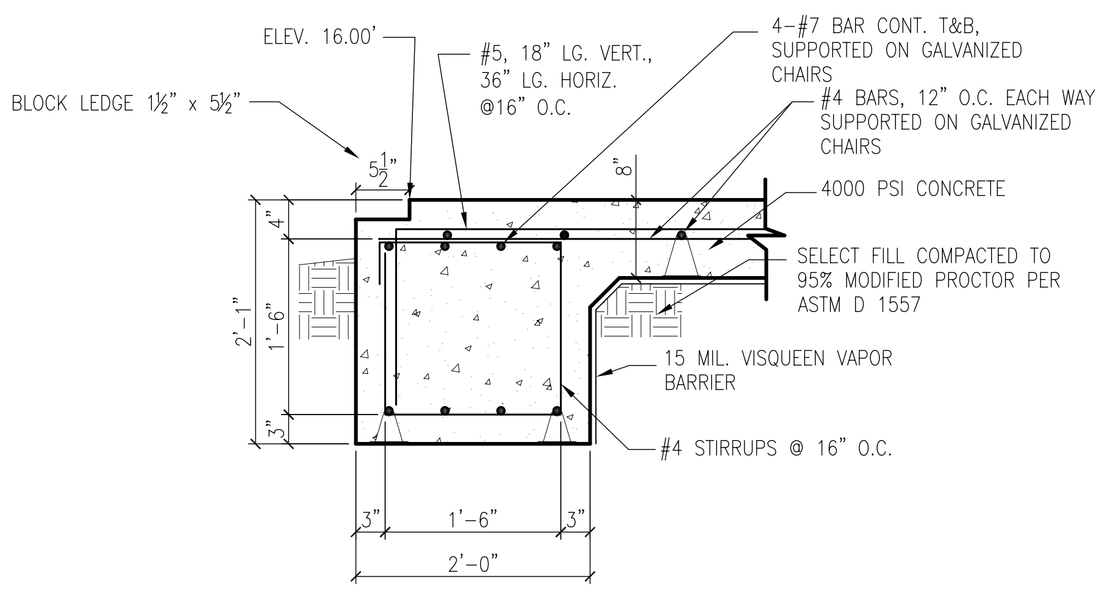

SECTION N / S2.1

SCALE: 1"=1'-0"

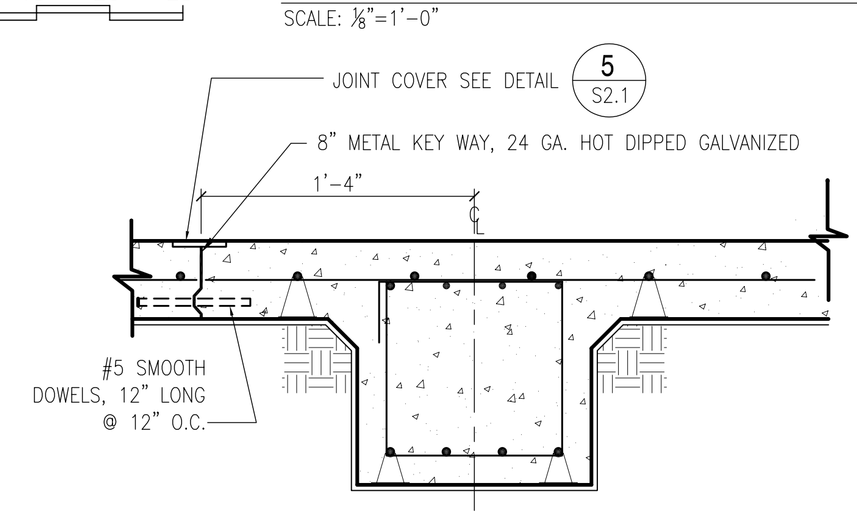

ALL INTERIOR GRADE BEAM MATERIALS AND DIMENSIONS ARE SIMILAR TO SECTION N

CONTROL JOINT SECTION Q / S2.1

SCALE: 1"=1'-0"

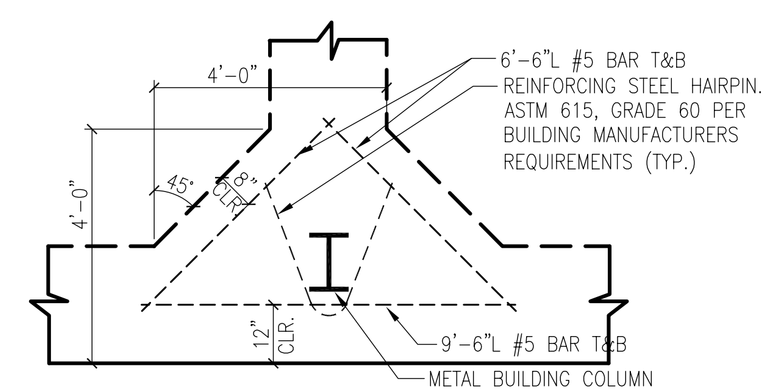

ALL FOUNDATION MATERIALS AND DIMENSIONS ARE SIMILAR TO SECTION N

FOOTING @ COLUMN DETAIL 4 / S2.1

SCALE: 1/2"=1'-0"

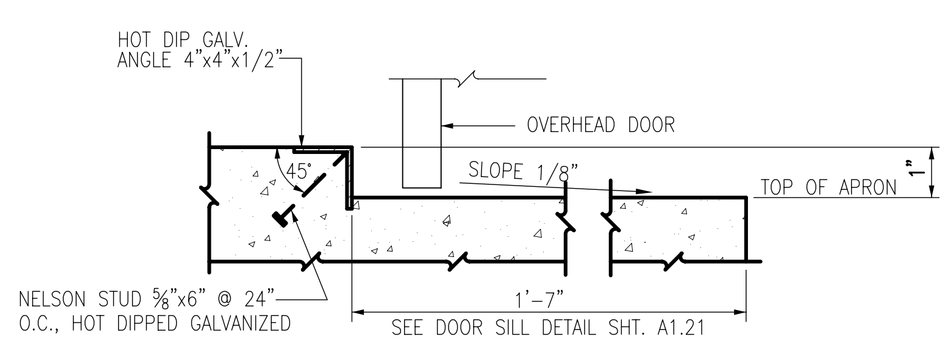

ANGLE EMBEDS SECTION P / S2.1

N.T.S.

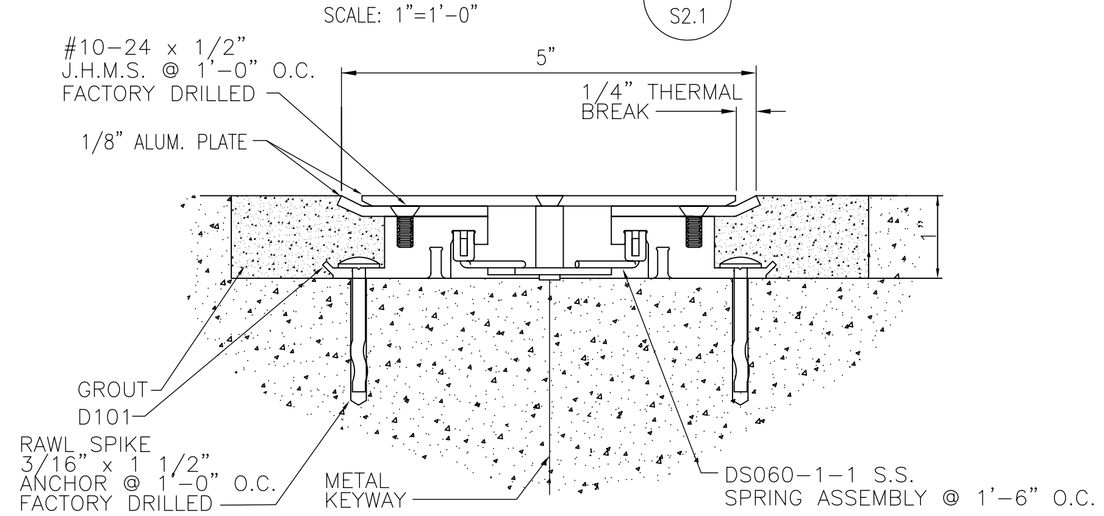

JOINT COVER 5 / S2.1

SCALE: N.T.S.

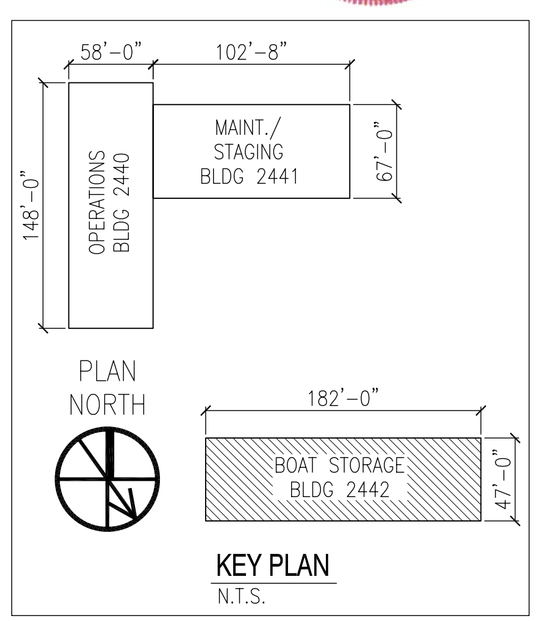

KEY PLAN

N.T.S.

DES: C. DAMMON	DRW: C. DAMMON
REVIEWED BY: R. WILTSE	
PM/DM: T. ARTRIP	
CHIEF ENG/ARCH. P. DAMMON	

DEPARTMENT OF THE NAVY
NAVAL FACILITIES ENGINEERING COMMAND
NAVAL FACILITIES ENGINEERING COMMAND SOUTHEAST
NAVAL AIR STATION JACKSONVILLE
JOHN C. STENNIS SPACE CENTER
MISSISSIPPI
PT GULF COAST

SOF RIVERINE AND COMBATANT CRAFT OPERATIONS FACILITY - PRE-FINAL

STORAGE BLDG. 2442 FOUNDATION PLAN

CODE ID. NO. N4412	SIZE D
SCALE:	AS SHOWN
MAXIMO NO.	######
STA. PROJ. NO.	P-210
WORK ORDER NO.	510247
CONSTR. CONTR. NO.	N62467-05-D-0096
NAVFAC DRAWING NO.	15026722
SHEET 75 OF 132	

S2.1

DAMMON ENGINEERING, INC.
CHIEF ENGINEER EMMETT G. DAMMON, P.E.
CHIEF ARCHITECT ROBERT WILTSE
1095 FLORIDA AVENUE
SLIDELL, LA 70458
(985) 649-5832
SEPTEMBER 4, 2009

EMMETT G. DAMMON LICENSED PROFESSIONAL ENGINEER 9652 STATE OF MISSISSIPPI

ROBERT LEE WILTSE REG. NO. 27739 STATE OF LOUISIANA REGISTERED ARCHITECT

DRAWFORM REVISION: 01 JAN 2009

REVDATE: