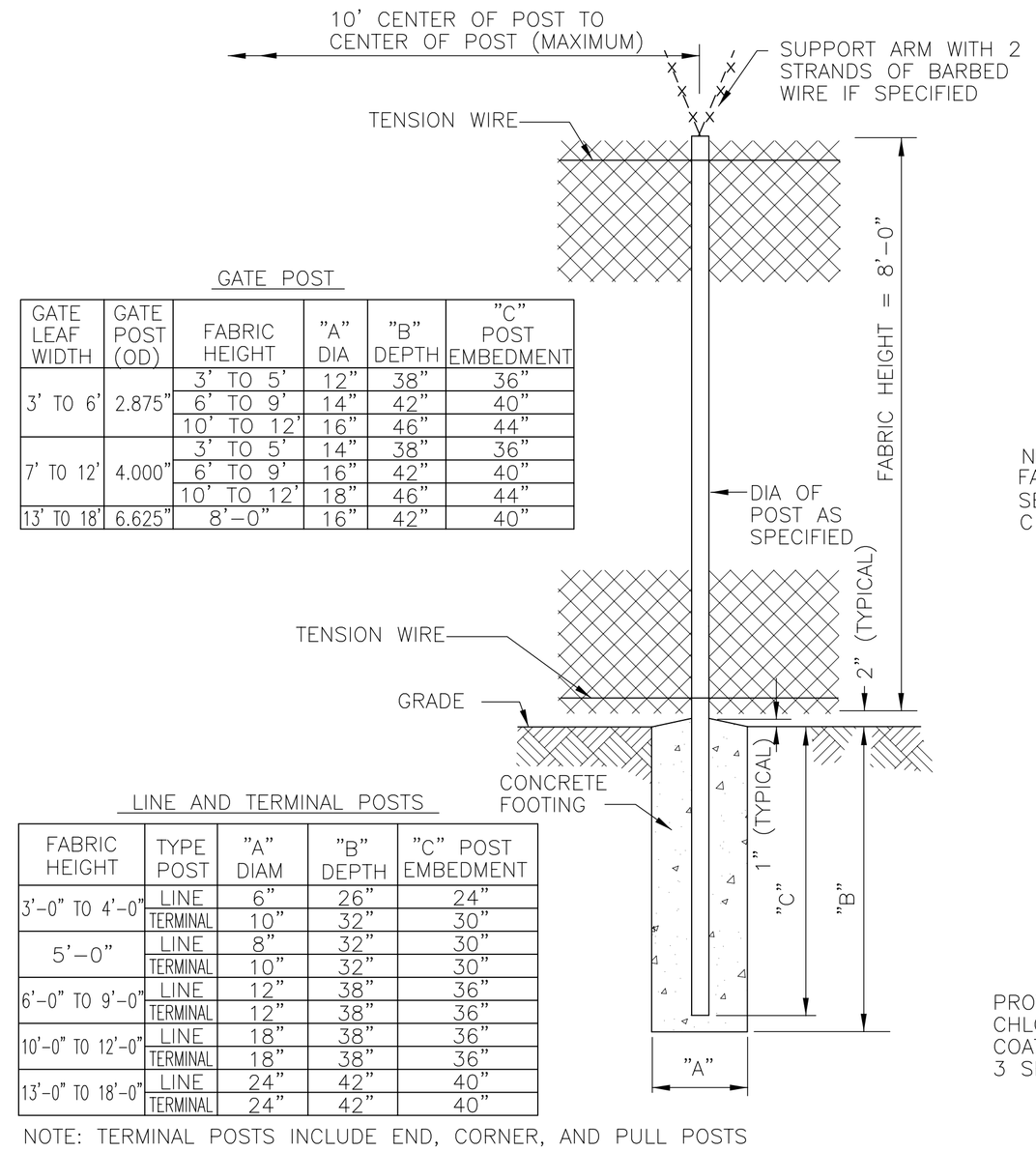

GATE POST

GATE LEAF WIDTH	GATE POST (OD)	FABRIC HEIGHT	"A" DIA	"B" DEPTH	"C" POST EMBEDMENT
3' TO 6'	2.875"	3' TO 5'	12"	38"	36"
		6' TO 9'	14"	42"	40"
		10' TO 12'	16"	46"	44"
7' TO 12'	4.000"	3' TO 5'	14"	38"	36"
		6' TO 9'	16"	42"	40"
		10' TO 12'	18"	46"	44"
13' TO 18'	6.625"	8'-0"	16"	42"	40"

LINE AND TERMINAL POSTS

FABRIC HEIGHT	TYPE POST	"A" DIAM	"B" DEPTH	"C" POST EMBEDMENT
3'-0" TO 4'-0"	LINE	6"	26"	24"
	TERMINAL	10"	32"	30"
5'-0"	LINE	8"	32"	30"
	TERMINAL	10"	32"	30"
6'-0" TO 9'-0"	LINE	12"	38"	36"
	TERMINAL	12"	38"	36"
10'-0" TO 12'-0"	LINE	18"	38"	36"
	TERMINAL	18"	38"	36"
13'-0" TO 18'-0"	LINE	24"	42"	40"
	TERMINAL	24"	42"	40"

NOTE: TERMINAL POSTS INCLUDE END, CORNER, AND PULL POSTS

CHAIN LINK FENCE 1 / C1.4
NOT TO SCALE

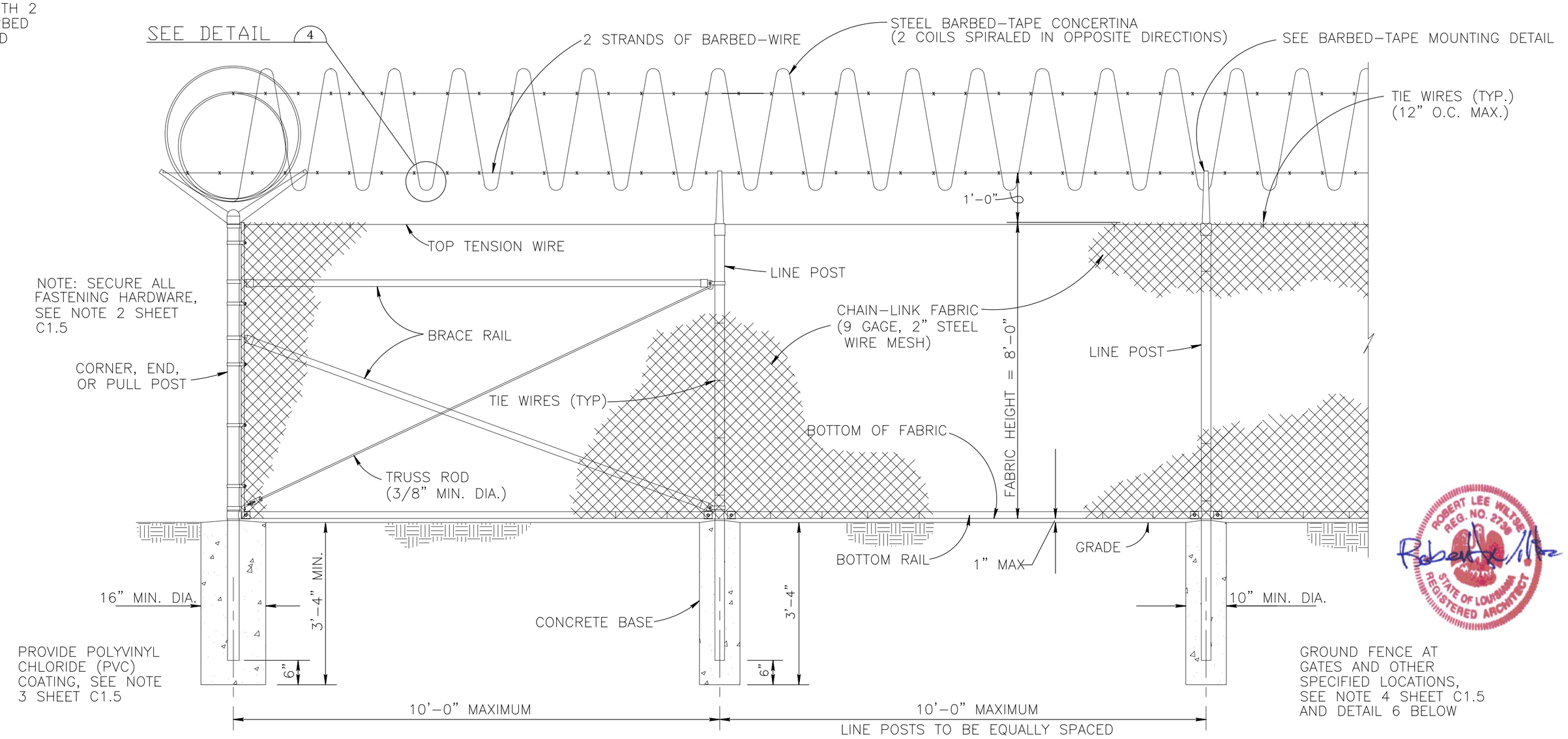

CHAIN LINK SECURITY FENCE DETAIL 2 / C1.1
NOT TO SCALE

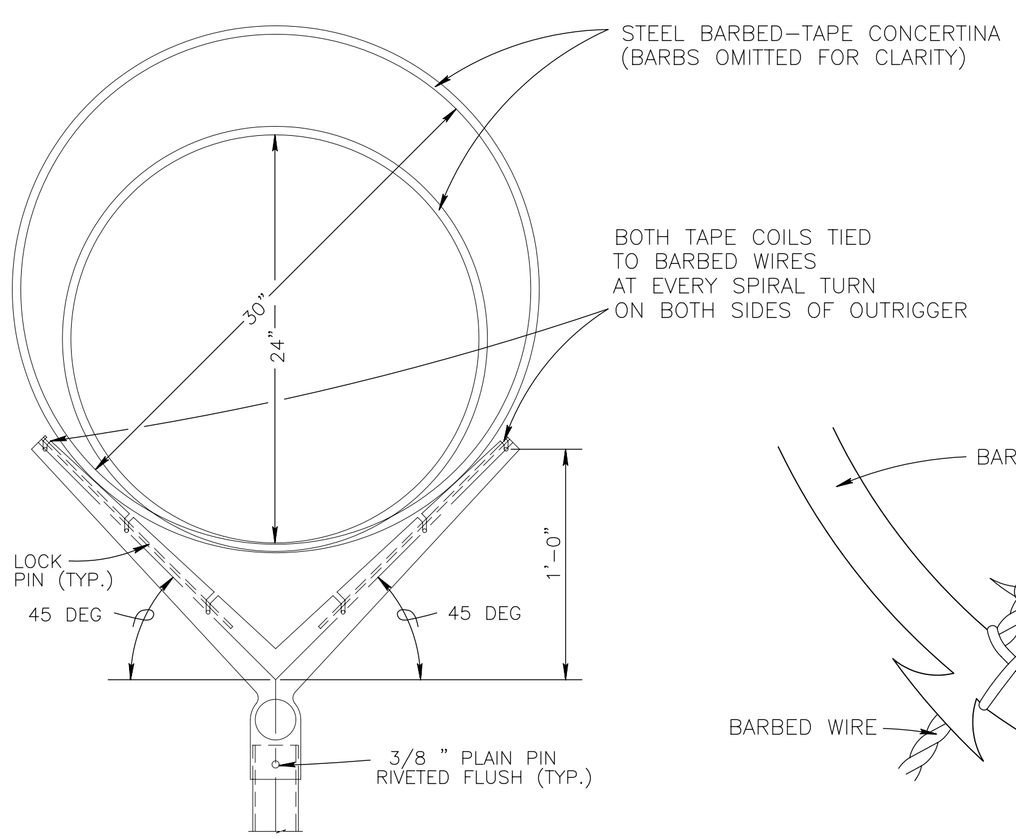

BARBED-TAPE MOUNTING DETAIL 3 / C1.4
NOT TO SCALE

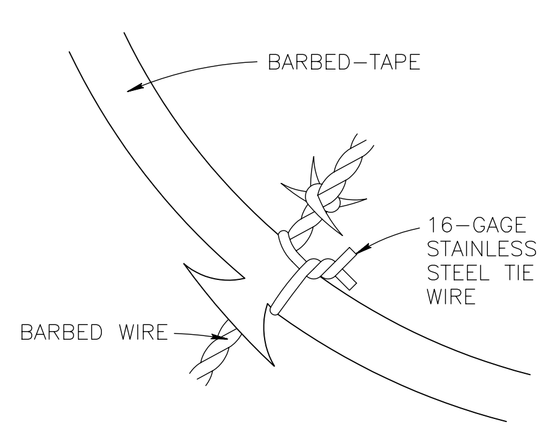

CONNECTION DETAIL 4 / C1.4
NOT TO SCALE

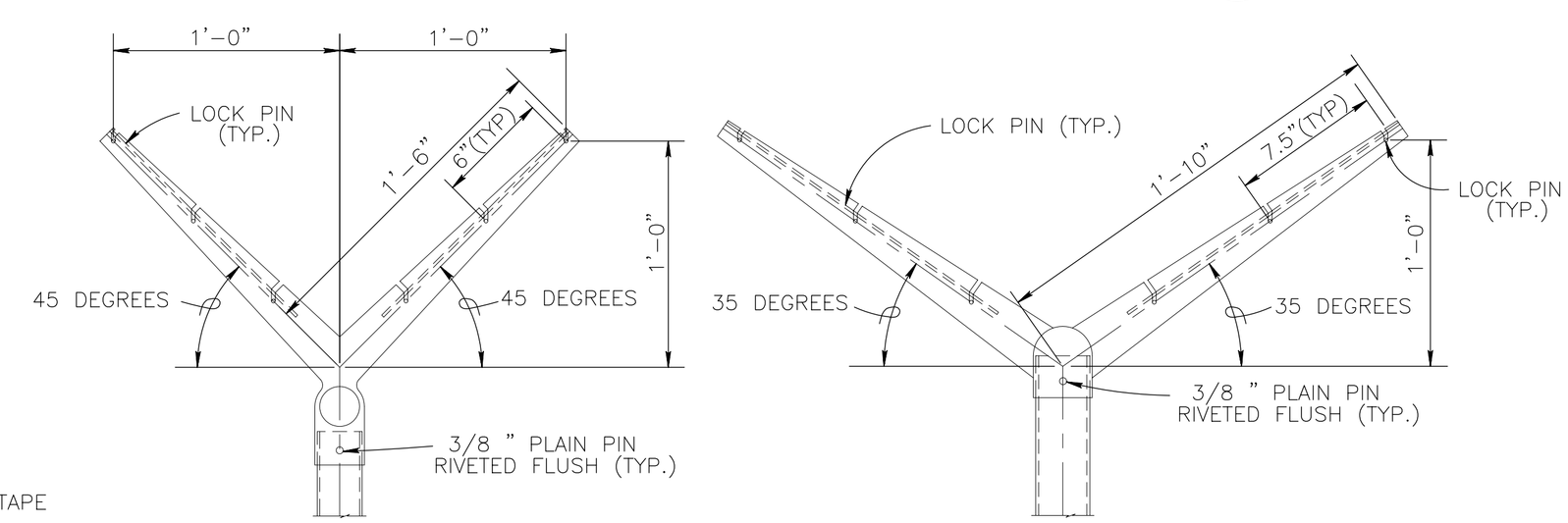

EXTENSION ARM DETAILS 5 / C1.4
NOT TO SCALE

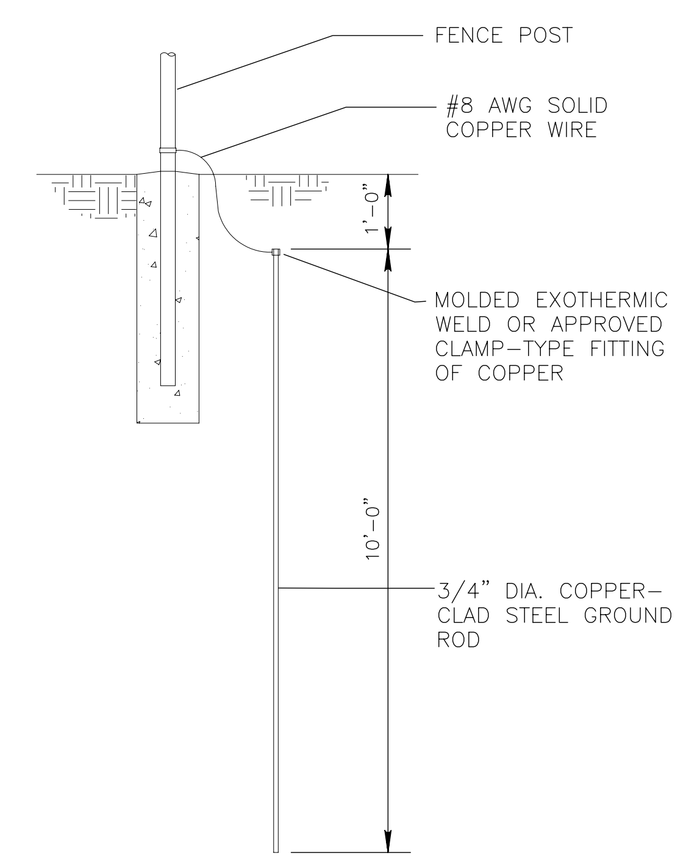

GROUNDING DETAIL 6 / C1.4
NOT TO SCALE

NAVFAC

DAMMON ENGINEERING, INC.
CHIEF ENGINEER EMMETT G. DAMMON, P.E. — CHIEF ARCHITECT ROBERT WILTSE
1095 FLORIDA AVENUE SLIDELL, LA 70458 (985) 649-5832
SEPTEMBER 4, 2009

DES: R. WILTSE | DRW: J. LOGUE
REVIEWED BY: R. WILTSE
PM/DM: T. ARTRIP
CHIEF ENG/ARCH. P. DAMMON

DEPARTMENT OF THE NAVY
NAVAL FACILITIES ENGINEERING COMMAND
NAVAL FACILITIES ENGINEERING COMMAND SOUTHEAST
NAVAL AIR STATION JACKSONVILLE MISSISSIPPI
JOHN C. STENNIS SPACE CENTER
SOF RIVERINE AND COMBATANT CRAFT OPERATIONS FACILITY - PRE-FINAL
SITE CIVIL DETAILS

CODE ID. NO. N4412 | SIZE D
SCALE: AS SHOWN
MAXIMO NO. ######
STA. PROJ. NO. P-210
WORK ORDER NO. 510247
CONSTR. CONTR. NO. N62467-05-D-0096
NAVFAC DRAWING NO. 15026657
SHEET 10 OF 132
C1.4

DRAWFORM REVISION: 01 JAN 2009

REVDATE: