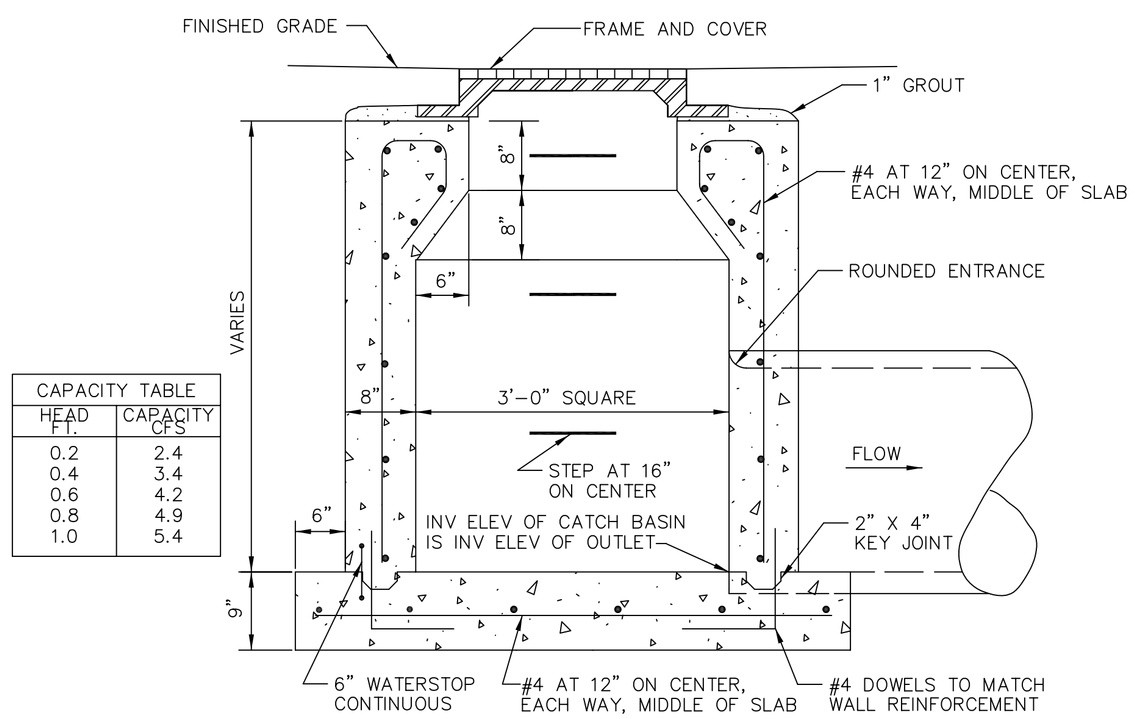

CAPACITY TABLE	
HEAD FT.	CAPACITY CFS
0.2	2.4
0.4	3.4
0.6	4.2
0.8	4.9
1.0	5.4

NOTE: MODIFY CATCH BASIN USED TO ACCOMODATE ARCH PIPE INSTALLED.

CATCH BASIN DETAIL (14)
N.T.S. C2.1

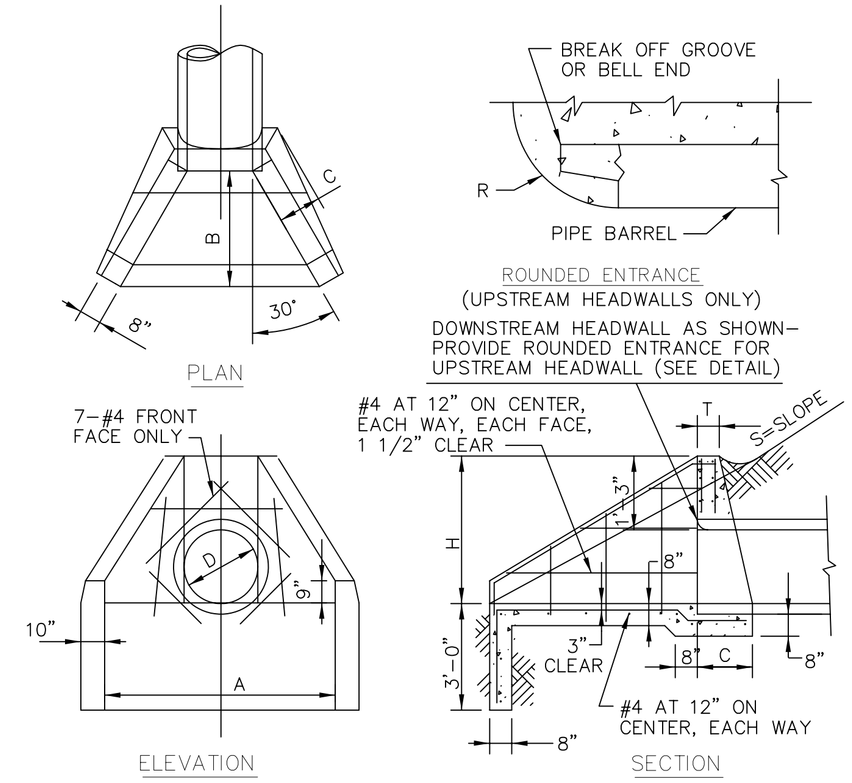

T = 8" FOR DOWNSTREAM HEADWALLS; R + 6" FOR UPSTREAM HEADWALLS

ALL SLOPES				S=1 1/2:1		S=2:1		S=3:1	
D	H	C	R	A	B	A	B	A	B
24"	3'-3"	1'-2"	3 5/8"	6'-4"	3'-9"	7'-9"	5'-0"	10'8"	7'-6"
27"	3'-6"	1'-3"	4"	7'-1"	4'-2"	8'-7"	5'-6"	11'10"	8'-3"
30"	3'-9"	1'-4"	4 1/2"	7'-9"	4'-6"	9'-5"	6'-0"	12'11"	9'-0"
36"	4'-3"	1'-5"	5 1/2"	9'-3"	5'-3"	11'1"	7'-0"	15'2"	10'6"
42"	4'-9"	1'-7"	6 3/8"	10'5"	6'-0"	12'9"	8'-0"	17'5"	12'0"

NOTE: MODIFY HEADWALL USED TO ACCOMODATE 24" ARCH PIPE.

CONCRETE HEADWALL (TYPE "B") (15)
N.T.S. C2.1

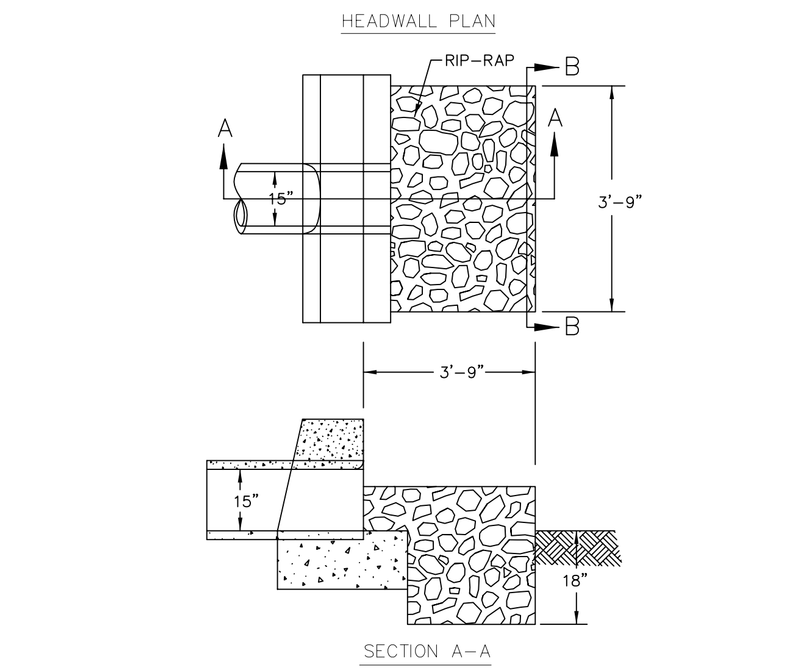

DISCHARGE AREA EROSION CONTROL DETAIL (16)
N.T.S. C2.1

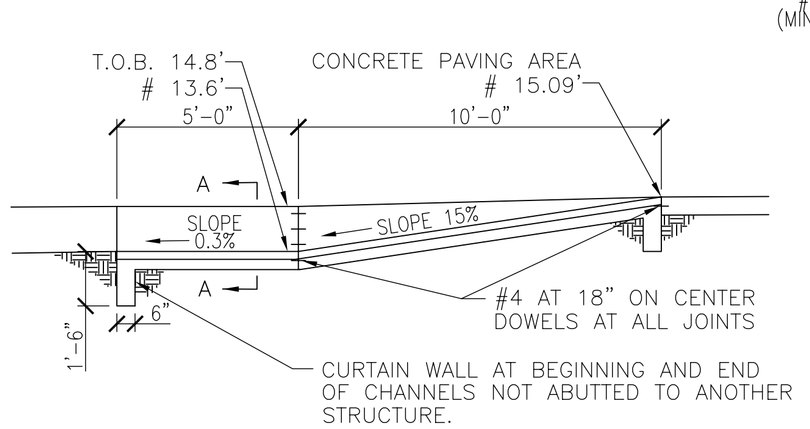

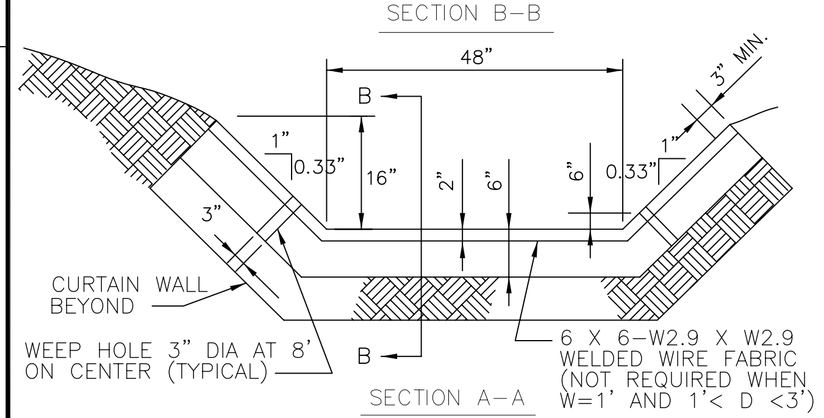

NOTE: WEEP HOLES TO BE PROVIDED ON ALL CHANNELS WHERE 'W' IS EQUAL TO OR GREATER THAN 4' AND 'D' IS EQUAL TO OR GREATER THAN 2'.

PAVED DITCH SECTION (B)
N.T.S. C2.1

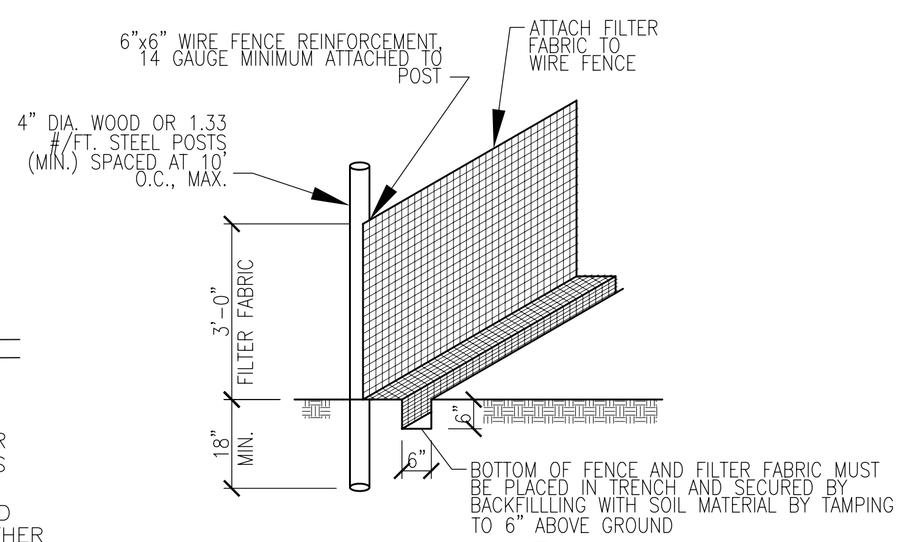

SILT FENCE DETAIL (17)
N.T.S. C2.1

NOTES:
1. SILT FENCE SHOULD BE INSPECTED AFTER EACH RAINFALL AND SEDIMENT DEPOSITS MUST BE REMOVED WHEN THEY REACH ¼ HEIGHT OF FENCE.
2. REMOVE WHEN GRASS IS ESTABLISHED.

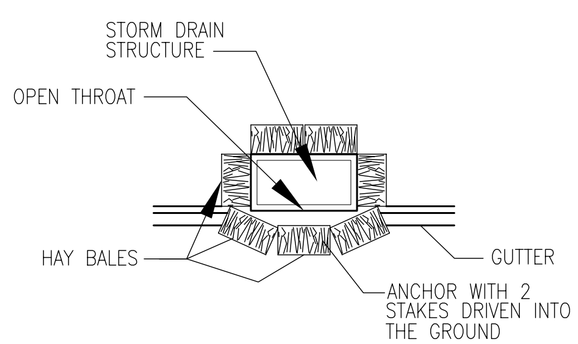

HAY BALE DETAIL (18)
N.T.S. C2.1

METHOD FOR SILT FENCE INSTALLATION

1) THE BASE OF BOTH END POSTS MUST BE AT LEAST 2'–4" ABOVE THE TOP OF THE SILT FENCE FABRIC ON THE MIDDLE POSTS FOR DITCH CHECKS TO DRAIN PROPERLY. USE A HAND LEVEL OR STRING LEVEL, IF NECESSARY, TO MARK BASE POINTS BEFORE INSTALLATION.
2) INSTALL POSTS 3–4 FEET APART IN CRITICAL WATER RETENTION AREAS AND 6–7 FEET APART ON STANDARD APPLICATIONS.
3) INSTALL POSTS 24" DEEP ON THE DOWNSTREAM SIDE OF THE SILT FENCE, AND AS CLOSE AS POSSIBLE TO THE FABRIC, ENABLING POSTS TO SUPPORT THE FABRIC FROM UPSTREAM WATER PRESSURE.
4) INSTALL POSTS WITH THE NIPPLES FACING AWAY FROM THE SILT FENCE FABRIC.
5) ATTACH THE FABRIC TO EACH POST WITH THREE TIES, ALL SPACED WITHIN THE TOP 8" OF THE FABRIC. ATTACH EACH TIE DIAGONALLY 45° THROUGH THE FABRIC, WITH EACH PUNCTURE AT LEAST 1" VERTICALLY APART. ADDITIONALLY, EACH TIE SHOULD BE POSITIONED TO HANG ON A POST NIPPLE WHEN TIGHTENED TO PREVENT SAGGING.
6) WRAP APPROXIMATELY 6" OF FABRIC AROUND THE END POSTS AND SECURE WITH 3 TIES.
7) NO MORE THAN 24" OF A 36" FABRIC IS ALLOWED ABOVE GROUND LEVEL.
8) THE INSTALLATION SHOULD BE CHECKED AND CORRECTED FOR ANY DEVIATIONS BEFORE COMPACTION. USE A FLAT–BLADED SHOVEL TO TUCK FABRIC DEEPER INTO THE SILT IF NECESSARY.
9) COMPACTING IS VITALLY IMPORTANT FOR EFFECTIVE RESULTS. COMPACT THE SOIL IMMEDIATELY NEXT TO THE SILT FENCE FABRIC WITH THE FRONT WHEEL OF THE TRACTOR, SKID STEER, OR ROLLER EXERTING AT LEAST 60 PSI OF PRESSURE. COMPACT THE UPSTREAM SIDE FIRST, AND THEN EACH SIDE TWICE FOR A TOTAL OF FOUR TRIPS.

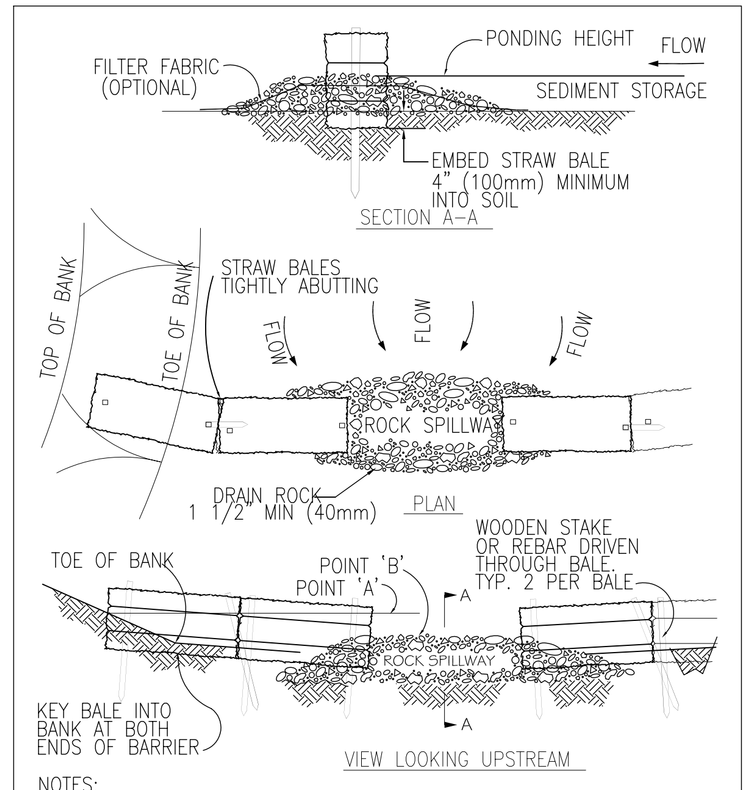

NOTES:
1. PLACE BALES PERPENDICULAR TO FLOW.
2. EMBED THE BALE 4" (100mm) INTO THE SOIL AND "KEY" THE END BALES INTO THE CHANNEL BANKS TO PREVENT FLOW AROUND THE BALES.
3. BALES PLACED IN A ROW WITH ENDS TIGHTLY ABUTTING.
4. POINT "A" SHALL BE HIGHER THAN POINT "B".
5. SPILLWAY HEIGHT SHALL NOT EXCEED 24" (0.6m).

SEMI-PERVIOUS STRAW BALE SEDIMENT BARRIER (19)
N.T.S. C2.1

MKS	DESCRIPTION	DATE	APPR

NAVFAC

DAMMON ENGINEERING, INC.
CHIEF ENGINEER EMMETT DAMMON, P.E. | CHIEF ARCHITECT ROBERT WILTSE
1095 FLORIDA AVENUE
SLIDELL, LA 70458
(985) 649-5832
SEPTEMBER 4, 2009

EMMETT G. DAMMON LICENSED PROFESSIONAL ENGINEER 9652 STATE OF MISSISSIPPI

ROBERT LEE WILTSE REG. NO. 2736 STATE OF LOUISIANA REGISTERED ARCHITECT

DES: C. DAMMON | DRW: C. DAMMON
REVIEWED BY: R. WILTSE
PM/DM: T. ARTRIP
CHIEF ENG/ARCH. P. DAMMON

DEPARTMENT OF THE NAVY
NAVAL FACILITIES ENGINEERING COMMAND SOUTHEAST
JOHN C. STENNIS SPACE CENTER
NAVAL FACILITIES ENGINEERING COMMAND
NAVAL AIR STATION JACKSONVILLE
BPT GULF COAST
MISSISSIPPI

SOF RIVERINE AND COMBATANT CRAFT OPERATIONS FACILITY - PRE-FINAL

DRAINAGE DETAILS

CODE ID. NO. N4412 | SIZE D
SCALE: AS SHOWN
MAXIMO NO. ######
STA. PROJ. NO. P–210
WORK ORDER NO. 510247
CONSTR. CONTR. NO. N62467–05–D–0096
NAVFAC DRAWING NO. 15026663
SHEET 16 OF 132

C2.4

DRAWFORM REVISION: 01 JAN 2009

REVDATE: