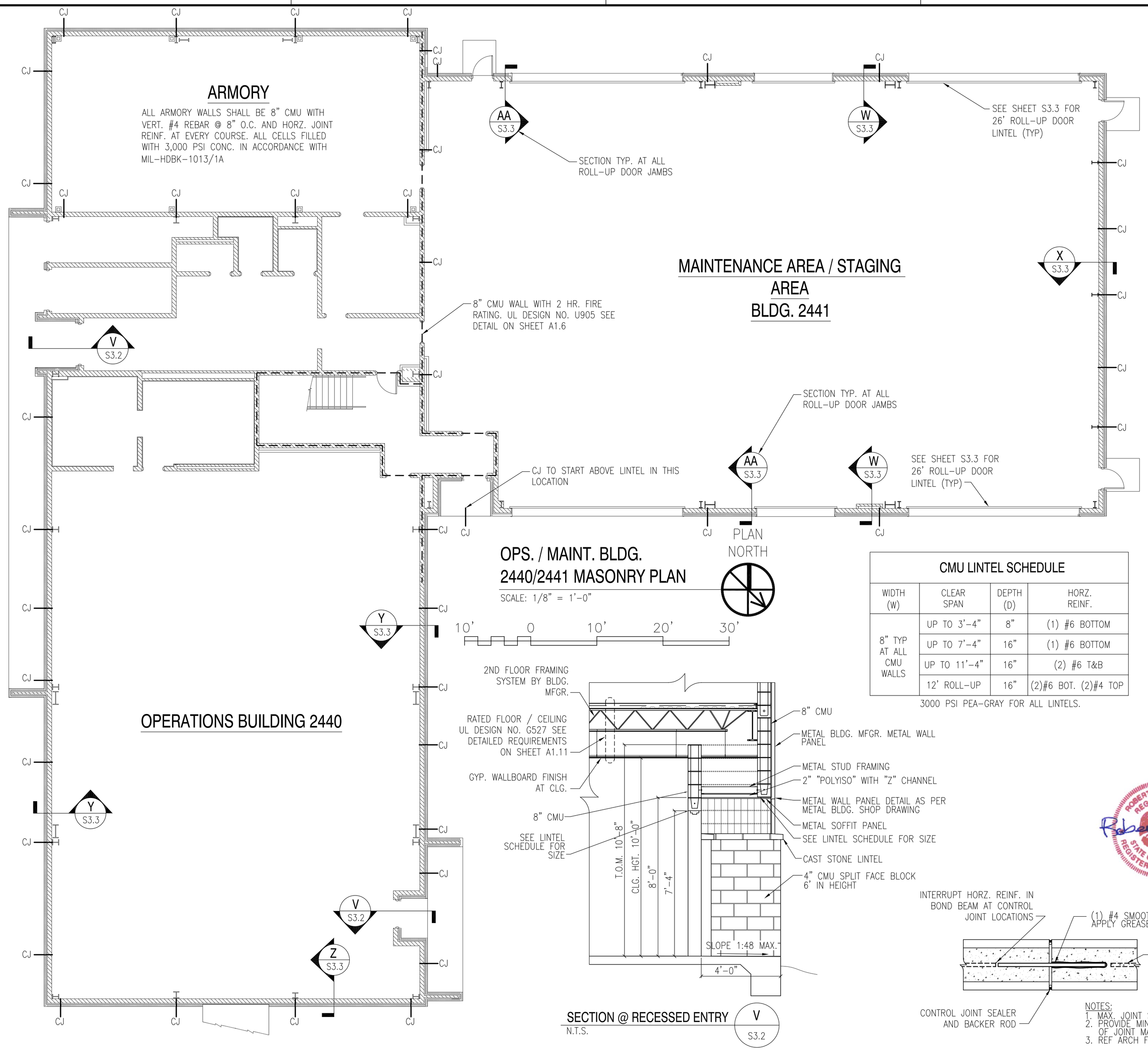

OPS. / MAINT. BLDG. 2440/2441 MASONRY PLAN

SCALE: 1/8" = 1'-0"

SECTION @ RECESSED ENTRY (V / S3.2)

N.T.S.

CMU LINTEL SCHEDULE

WIDTH (W)	CLEAR SPAN	DEPTH (D)	HORZ. REINF.
8" TYP AT ALL CMU WALLS	UP TO 3'-4"	8"	(1) #6 BOTTOM
	UP TO 7'-4"	16"	(1) #6 BOTTOM
	UP TO 11'-4"	16"	(2) #6 T&B
	12' ROLL-UP	16"	(2)#6 BOT. (2)#4 TOP

3000 PSI PEA-GRAY FOR ALL LINTELS.

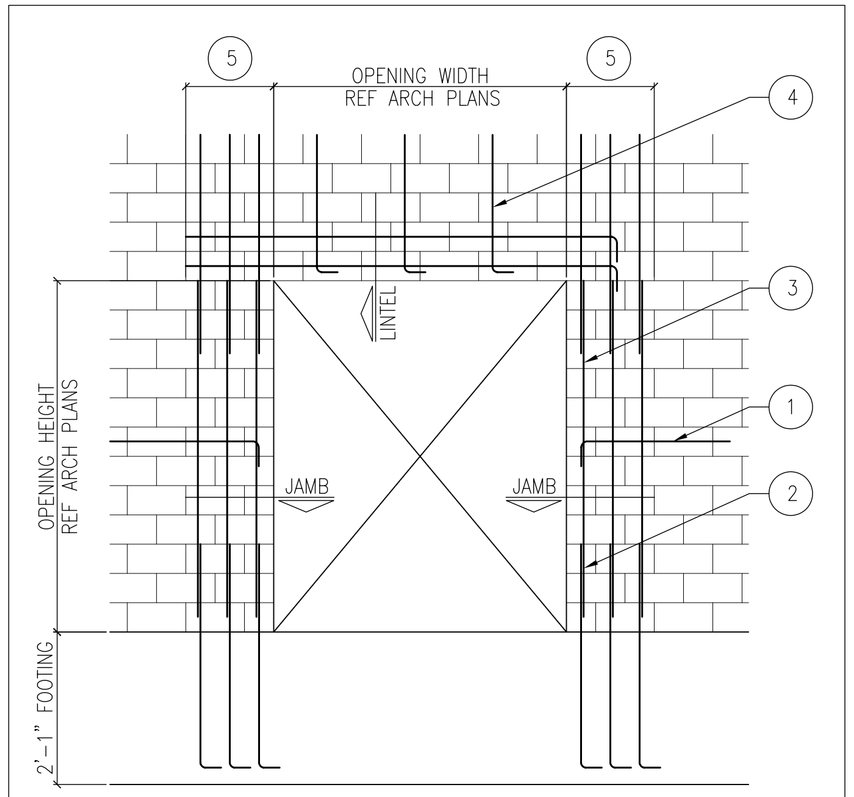

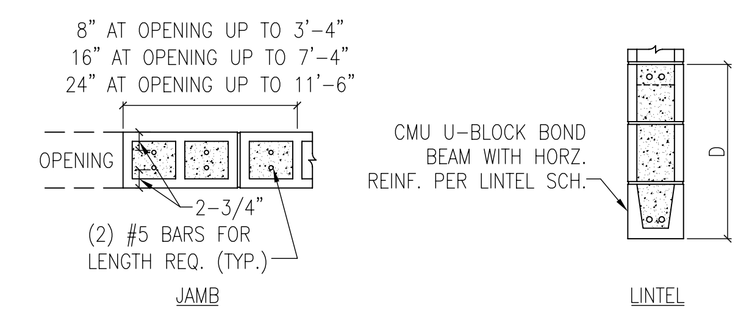

NOTES:
1. WHERE HORIZ. REINFORCEMENT IS INTERRUPTED BY OPENING OR CONTROL JOINT PROVIDE STANDARD ACI HOOK WITH VERT. WALL REINF. AT END CELL.
2. SPLICES IN VERT. REINF. REF. WALL SECTIONS S3.3.
3. ALL VERT. BARS AT DOOR JAMBS TO BE FULL HEIGHT.
4. CONTINUE VERT. WALL REINF. OVER OPENING. ANCHOR VERT. REINF. INTO LINTEL BEAM WITH STANDARD ACI HOOK.
5. EXTEND LINTEL A MIN. 2'-0" BEYOND FACE OF OPENING EACH SIDE FOR STRAIGHT LINTEL REINF. AND 1'-0" FOR LINTEL REINF. WITH STANDARD ACI HOOK.

TYPICAL MASONRY WALL OPENING DIAGRAM

SCALE: N.T.S.

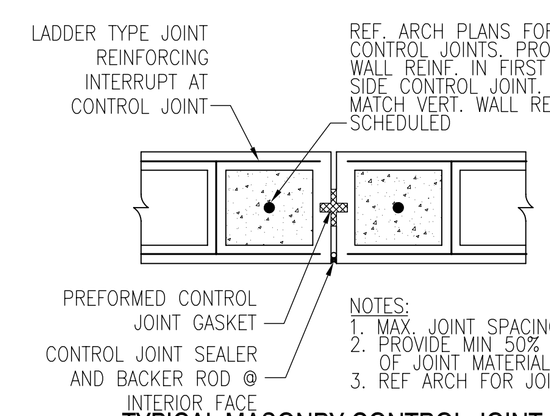

NOTES:
1. MAX. JOINT SPACING = 17'.
2. PROVIDE MIN 50% EXTENSIBILITY OF JOINT MATERIAL.
3. REF ARCH FOR JOINT LOCATIONS

TYPICAL MASONRY CONTROL JOINT

SCALE: N.T.S.

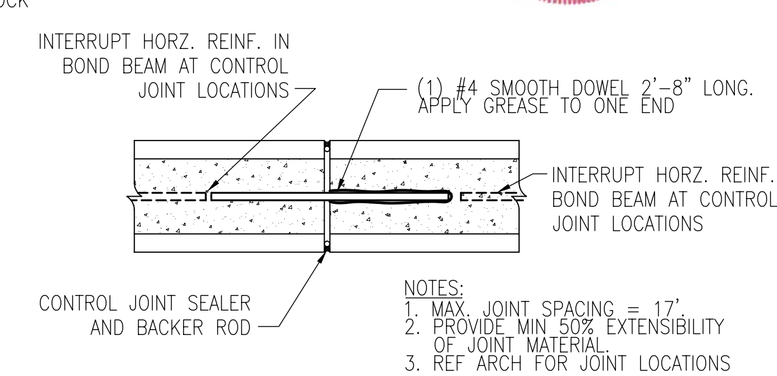

NOTES:
1. MAX. JOINT SPACING = 17'.
2. PROVIDE MIN 50% EXTENSIBILITY OF JOINT MATERIAL.
3. REF ARCH FOR JOINT LOCATIONS

CONTROL JOINT @ BOND BEAM

SCALE: N.T.S.

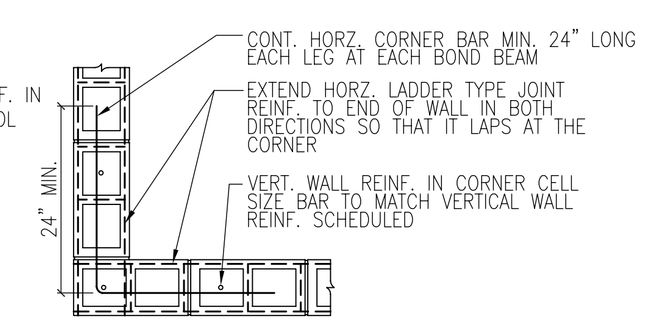

TYPICAL REINF. @ CORNER OF MASONRY

SCALE: N.T.S.

	DATE	APPR
DESCRIPTION		
STM		

NAVFAC

DAMMON ENGINEERING, INC.
CHIEF ENGINEER EMMETT DAMMON, P.E. — CHIEF ARCHITECT ROBERT WILTSE
1095 FLORIDA AVENUE SLIDELL, LA 70458 (985) 649-5832
SEPTEMBER 4, 2009

EMMETT G. DAMMON LICENSED PROFESSIONAL ENGINEER 9652 STATE OF MISSISSIPPI

DES: R. WILTSE — DRW: J. TIFFANY
REVIEWED BY: R. WILTSE
PM/DM: T. ARTRIP
CHIEF ENG/ARCH. P. DAMMON

DEPARTMENT OF THE NAVY
NAVAL FACILITIES ENGINEERING COMMAND
IPT GULF COAST
JOHN C. STENNIS SPACE CENTER
NAVAL FACILITIES ENGINEERING COMMAND SOUTHEAST
NAVAL AIR STATION JACKSONVILLE MISSISSIPPI

SOF RIVERINE AND COMBATANT CRAFT OPERATIONS FACILITY - PRE-FINAL

BLDG. 2440 / 2441 MASONRY PLAN

CODE ID. NO. N4412	SIZE D
SCALE:	AS SHOWN
MAXIMO NO.	######
STA. PROJ. NO.	P-210
WORK ORDER NO.	510247
CONSTR. CONTR. NO.	N62467-05-D-0096
NAVFAC DRAWING NO.	15026725
SHEET	78 OF 132

S3.2

DRAWFORM REVISION: 01 JAN 2009

REVDATE: