ZONING C-2

WESTMINSTER DRIVE SIDE

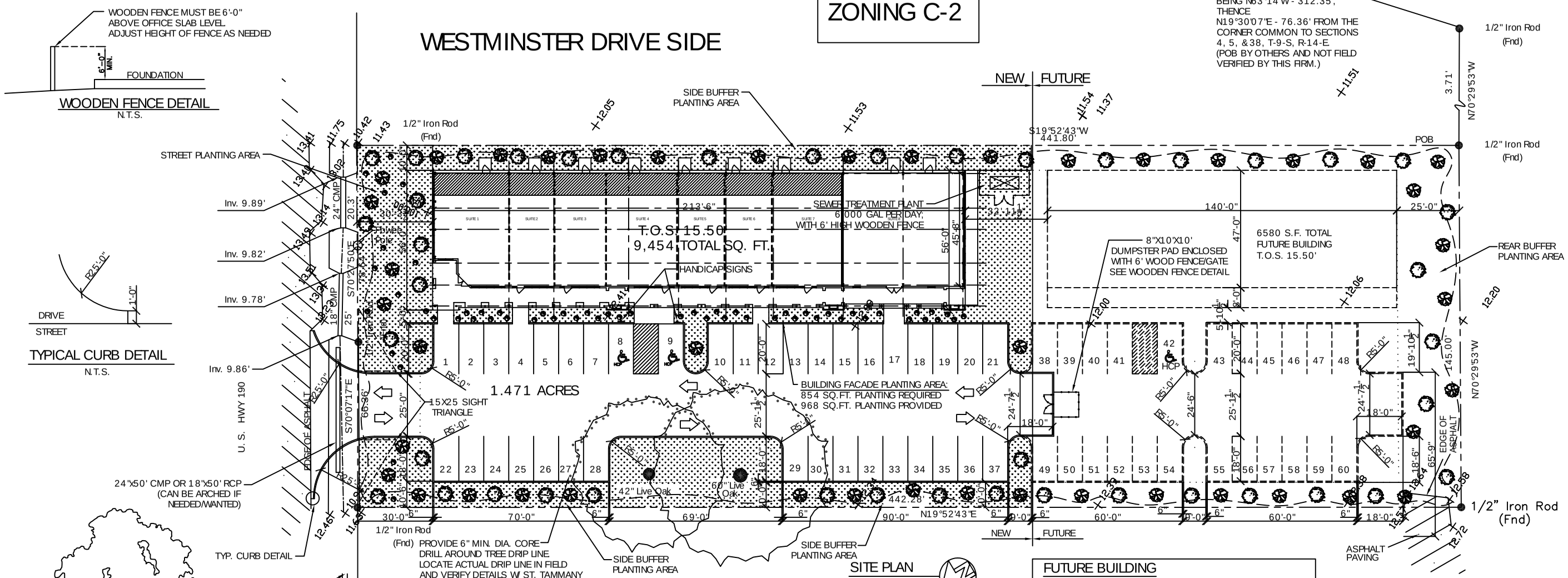

SITE PLAN
SCALE: 1"= 20'-0"

PROPOSED BUILDING

7,252 S.F. GENERAL MERCANTILE, 1 PER 350 S.F. = 26 SPACES
2,202 S.F. OFFICE SPACE, 1 PER 200 S.F. = 11 SPACES
37 TOTAL REQUIRED SPACES, 2 HANDICAPPED REQ'D (1 PER 25)

OVERALL

56 TOTAL SPACES REQUIRED
60 TOTAL SPACES PROVIDED

FUTURE BUILDING

6580 S.F. GENERAL MERCANTILE, 1 PER 350 S.F. = 19 SPACES
19 TOTAL REQUIRED SPACES, 1 HANDICAPPED REQ'D (1 PER 25)

LEGAL DESCRIPTION

TOPO OF A 1.471 ACRE PARCEL LOCATED NEAR THE CITY OF SLIDELL, IN SECTION 5, T-9-S, R-14-E, ST. TAMMANY PARISH, LOUISIANA

SITE LIGHTING

EXTERIOR LIGHTING SHALL BE SHADED OR INWARDLY DIRECTED IN SUCH A MANNER SO THAT NO DIRECT LIGHTING OR GLARE BE CAST BEYOND THE PROPERTY LINE. THE INTENSITY OF SUCH LIGHTING SHALL NOT EXCEED ONE FOOT CANDLE AS MEASURED AT THE ABUTTING PROPERTY LINE. (N/A)

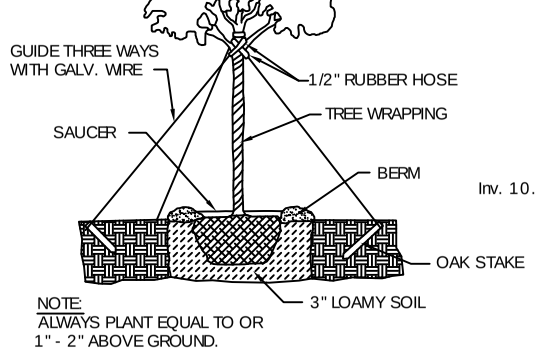

NOTE:
ALWAYS PLANT EQUAL TO OR 1" - 2" ABOVE GROUND.

TYPICAL TREE PLANTING DETAIL
N. T. S.

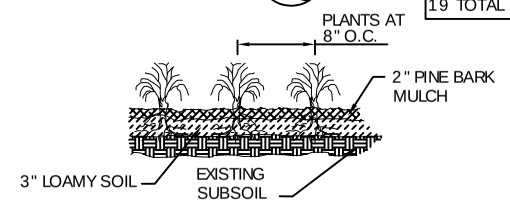

GROUND COVER DETAIL

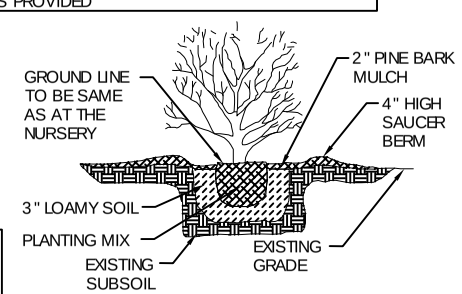

SHRUB DETAIL
N. T. S.

WORK SITE

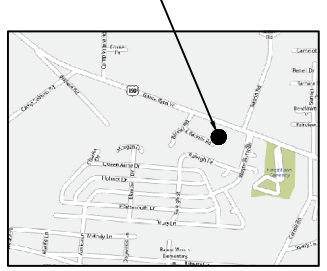

VICINITY MAP
N.T.S.

LANDSCAPE LEGEND

- CLASS A - ONE PER 25 LINEAR FEET (OR FRACTION THEREOF) OF STREET OR ROAD FRONTAGE; ONE PER 30 LINEAR FEET (OR FRACTION THEREOF) OF THE BUFFER PLANTING AREA AND ONE-HALF OF LANDSCAPED ISLANDS
- CLASS B - ONE PER 25 LINEAR FEET (OR FRACTION THEREOF) OF STREET OR ROAD FRONTAGE; ONE PER 30 LINEAR FEET (OR FRACTION THEREOF) OF THE BUFFER PLANTING AREA AND ONE-HALF OF LANDSCAPED ISLANDS
- SHRUBS - ONE PER 10 LINEAR FEET (OR FRACTION THEREOF) OF STREET OR ROAD FRONTAGE AND BUFFER PLANTING AREA; ONE PER 20 SQ.FT. SHALL BE PLANTED IN BUILDING FACADE PLANTING AREA
- LANDSCAPE FILTER AREA ARE TO INCLUDE A GROUNDCOVER AND LANDSCAPE MATERIAL; EXAMPLES INCLUDE: SOLID SOD, MONKEY GRASS, LIRIOPE, JAPANESE ARDESIA, ASIAN JASMINE OR IRIS.

LEGEND

- PROPERTY LINE
- SETBACK
- NEW BUILDING OUTLINE
- FUTURE CONSTRUCTION
- HCP - HANDICAP PARKING
- HANDICAP PARKING SIGN
- TRAFFIC FLOW DIRECTION
- TEMPORARY SILT FENCING

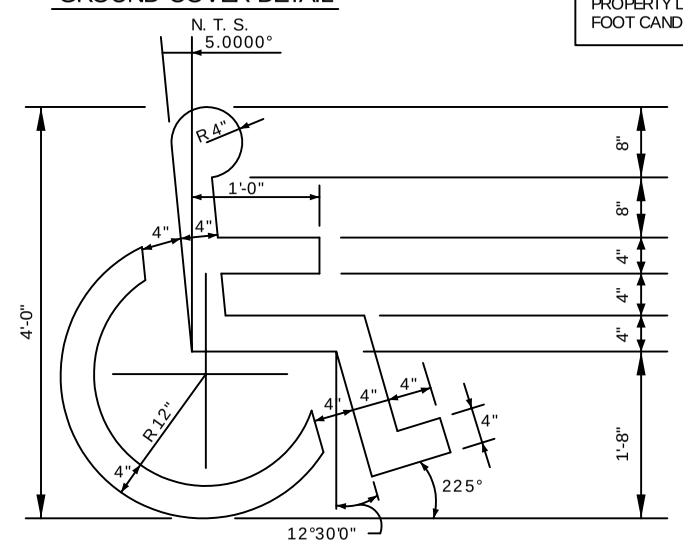

HANDICAP SYMBOL DETAIL
N. T. S.

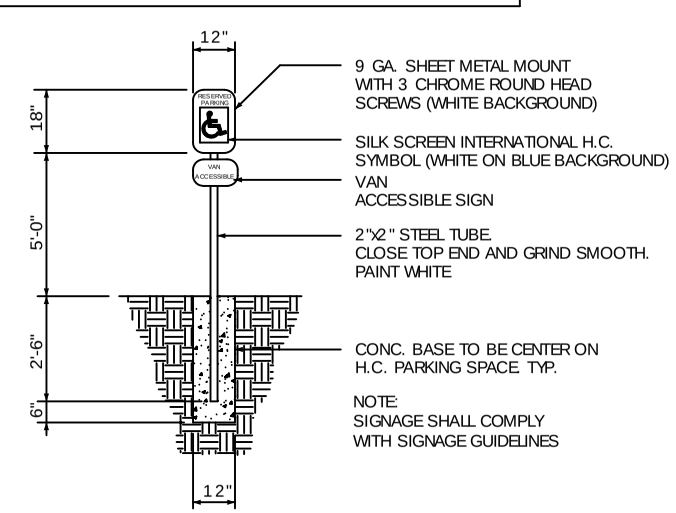

HANDICAP PARKING SIGN
N. T. S.

DAMMON ENGINEERING, INC.
EMMETT DAMMON
ARCHITECT ROBERT WILTSE
1095 FLORIDA AVENUE
SLIDELL, LA. 70458
985-649-5832
WEBSITE: WWW.DAMMONENGINEERING.COM
EMAIL: DAMMONENG@BELLSOUTH.NET

ARCHITECTURE
ENGINEERING
STUDIES
PLANNING
INVESTIGATION
EXPERT WITNESS

NEW OFFICE BUILDING

KEN STARLING
HWY 190
SLIDELL, LA

SITE PLAN

REV:

SCALE: AS NOTED
JOB#: 1901
DATE: 1-25-08
SHEET
C-2
OF